CLATSOP COUNTY BOARD OF COMMISSIONERS

"Neighbor to neighbor, serving Clatsop County with integrity, honesty and respect"

Scott Lee, Dist. 1 – Chairman
Dirk Rohne, Dist. 4 – Vice-Chairman
Sarah Nebeker, Dist. 2
Lisa Clement, Dist. 3
Lianne Thompson, Dist. 5
commissioners@co.clatsop.or.us

800 Exchange, Suite 410
Astoria, OR97103
Phone (503) 325-1000
Fax (503) 325-8325

www.co.clatsop.or.us

Work Session/Regular Meeting

December 14, 2016

Judge Guy Boyington Building, 857 Commercial, Astoria

Work Session: 4:30 pm @ Clatsop County Jail

Work Sessions are an opportunity for Board members to discuss issues informally with staff and invited guests. The Board encourages members of the public to attend Work Sessions and listen to the discussion, but there is generally no opportunity for public comment. Members of the public wishing to address the Board are welcome to do so during the Board's regularly scheduled meetings held twice monthly.

Topic:

a. Clatsop County Jail Inspection

Regular Meeting: 6:00pm

The Board of Commissioners, as the Governing Body of Clatsop County, all County Service Districts for which this body so acts, and as the Clatsop County Local Contract Review Board, is now meeting in Regular Session.

1. **FLAG SALUTE**

2. **ROLL CALL**

3. **AGENDA APPROVAL**

4. **PRESENTATION**
   a. Clatsop Behavioral Healthcare
   b. Award of Appreciation

5. **BUSINESS FROM THE PUBLIC** - *This is an opportunity for anyone to give a 3 minute presentation about any item on the agenda (except public hearings) OR any topic of county concern that is not on the agenda. People wishing to speak during Business From The Public must fill out and sign a Public Comment Sign-in Card.*

6. **CONSENT CALENDAR**
   a. Board of Commissioners Work Session Minutes 11-9-16 .....{Page 1}
   b. Board of Commissioners Regular Meeting Minutes 11-9-16 .....{Page 3}
   c. Approval of Ceridian Contract – Payroll Services .....{Page 7}
   d. Approval of Janitorial Service Contract with NW Facility Solutions .....{Page 33}
   e. Approval of Contract for 2016-17 Emergency Management Program Grant .....{Page 39}
   f. Consider approving the creation of a three parcel partition plat of the NCBP .....{Page 61}
   g. Approve the 2016-17 Appropriation Adjustments as Required by ORS 294.463 .....{Page 63}
   h. Long Term Financial Plan Contract .....{Page 67}
   i. Purchase of Kenworth Dump Truck .....{Page 101}

j. Purchase of Kenworth Truck Chassis with Hook Lift & Attachments.....{Page 165}
k. Approval of contract amendment with Cowlitz County for juvenile detention services{Page 185}

7. BUSINESS AGENDA

a. Appointments to the Fair Board.....{Page 197}
b. Appointment to the Arts Council.....{Page 211}
c. Addition of GIS Fee to county-wide fee schedule.....{Page 217}
d. Consider the purchase of property adjoining Columbia River Valley Substation.....{Page 225}
e. Linn County State Forest Lawsuit – Public Input.....{Page 231}

a. COMMISSIONERS' REPORTS

b. COUNTY MANAGER'S REPORT

c. ADJOURNMENT

Complete copies of the current Board of Commissioners meeting agenda packets can be viewed at:
Astoria Public Library - Seaside Public Library - Board of Commissioners Office

Agenda packets also available online at www.co.clatsop.or.us

This meeting is accessible to persons with disabilities. Please call 325-1000 if you require special accommodations to participate in this meeting.

Clatsop County Board of Commissioners
Work Session
November 9, 2016

Chair Scott Lee called the work session to order at 5:00p.m., at the Judge Guy Boyington Building, 857 Commercial Street, Astoria, Oregon. Also present were Commissioners Dirk Rohne, Sarah Nebeker, Lisa Clemente and Lianne Thompson.

Cameron Moore, County Manager
Robin Koch, Human Resource Director
Monica Steele, Budget & Finance Director
Heather Reynolds, County Counsel
Kathi Mattinen, Fair Manager
Jack Ficken, Fair Board Member
Jack Edwards, Fair Board Member
Mike Autio, Fair Board Member

a. Clatsop County Fair Board

Lee opened the work session. Moore said the fair is an important part of Clatsop County and they would like to review the statutes and the roles and responsibilities for all parties. Reynolds showed a map of the fairgrounds. Reynolds said that fairs in Oregon predate statutes and counties so when the statutes were written on fairs they basically went unchanged for over a hundred years. There is tension between fair boards and counties throughout the state on how to handle liability issues. The statute gives exclusive management to the county fair board and the language governing the relationship is very old. Reynolds said in 1980 there was a lawsuit in Lincoln County where a horse barn burned which was full of horses and the courts found the county liable. The lawsuit started a discussion on the roles and responsibilities of the county and the fair board. The statute was amended to say that the county court may conclude that an agreement is needed to protect the county from liability relating to personnel or contractual matters. Clatsop County and the Fair Board signed a Memorandum of Understanding (MOU) in 2000 and in 2010 a revision was done. Reynolds said the Fair Board's policies are fairly ancient and there are statutes that have changed. Personnel policies can protect against violating discrimination laws and harassment laws. Reynolds suggests that the Fair Board adopt the county's personnel policies. Reynolds stated that both boards should discuss what the contracting authority should be. The Fair Board should work with county staff on contracts or permits costing less than $30,000 and if it is more than $30,000 it needs to be approved by the Board of Commissioners. Reynolds said Mattinen brought some of the forms they are using for rentals and the insurance liability limits on those forms show one third of the amount they should be. Reynolds pointed out that on all federal or state environmental permits the Board of Commissioners approval as landowner is required. Reynolds said the policies should be reviewed by Moore and Mattinen to see which ones would be appropriate for the Fair Board. The three main issues that Reynolds sees as exposure to risk are personnel, contracts and permit issues. Autio asked if they adopted the personnel policies of the county would that get added to the MOU and Reynolds replied yes. Rohne said he appreciates the Fair Board and they work very hard and Rohne was hoping to have the Fair Board make a recommendation to the Board of Commissioners of their choice of replacements for the vacancies that are open. Moore said the

applications have been forwarded to Mattinen and at the December 14th board meeting the Board will appoint the new members. Rohne asked if it was working well for the fair to manage the lower properties such as the hay fields and Ficken said yes. Reynolds asked if the Fair Board had thought about selling the wetland area. Autio asked if it had ever been determined that parking was allowed on the wetland area and Reynolds didn't think it had ever been determined. Autio asked if they were interested in selling that area what would be the process. Reynolds said they would need to discuss that with county staff. Ficken said every three years he is up for reappointment and doesn't recall ever having to reapply but he would like to continue serving on the Fair Board and now he understands that reapplying is part of the process. Moore said it is good practice because it is protection for the county board and for the applicant to have the appointments on record. Moore said it also gives others opportunities. Koch wanted to encourage the Fair Board to look at their policies and how they line up with current laws. Autio asked if there was a way they could adopt the county personnel policies but not become part of the system. Koch asked for an example and Autio said if they needed to hire a maintenance employee could they do that without having to run them through the whole county system. Moore said the Fair Board has the hiring authority. Autio said sometimes they feel like they lose control. Moore said internal hiring usually involves the front line manager or director in making that decision and once they make a decision that's when the Human Resources Department takes over. Moore said the Fair Board has a lot of flexibility in decisions because they are not under the union clauses. Moore said he gave Mattinen the authority to sign contracts under $5000 this year so they could be expedited. Moore would like to be more proactive in the future. Autio asked if contracts under $30,000 needed to go through the county and Reynolds said that decision has not been definitively made but for this year Moore delegated Mattinen to approve contracts under $5000. Reynolds suggested that both finance and county counsel review the contracts. Moore said he couldn't find any paperwork that stated Mattinen had contract authority so that's why he gave her the authority to sign contracts under $5000. Autio would like to go over the MOU since it has been six years since a revision. Moore reminded the Fair Board to get their recommendations of the applicants to the Board of Commissioners. Ficken asked if it was the Fair Board's job to police the beer garden when they have events. Moore said it is their event and they have a responsibility to make sure people are consuming responsibly. The Fair Board is subject to the no smoking ordinance and there is no exception. Steele said that at the bigger events the Sheriff's Department will be there and they can enforce the county ordinance.

Adjournment 5:51p.m.

Approved by

_____

Scott Lee, Chairperson

Clatsop County Board of Commissioners
Regular Meeting
November 9, 2016

Chair Scott Lee called the meeting to order at 6:00 pm., in the Judge Guy Boyington Building, 857 Commercial Street, Astoria, Oregon. Also present were Commissioners Sarah Nebeker, Lisa Clement, and Lianne Thompson and Dirk Rohne.

Staff Present:

Cameron Moore	County Manager
Heather Reynolds	County Counsel
Monica Steele	Budget & Finance Director

AGENDA APPROVAL

Thompson made and Clement seconded a motion to approve the agenda. Motion carried unanimously.

PRESENTATION

a. 1st Quarter Financials

Steele addressed the Board to report the 1st quarter financials for the fiscal year 2016-17. For expenditures, all funds as a whole are currently coming in as expected. For revenues the unaudited beginning balances for several funds came in slightly higher than the budgeted amounts which are a result of realized savings within the funds as well as increased revenues in the prior fiscal year. Steele showed a slide with the revenue collections of all funds for the 1st quarter. The General Fund has collected 14% of the budgeted revenues which is up slightly from the previous fiscal year primarily as a result of the 1st quarter timber revenues coming in higher this fiscal year in comparison to 2015-16. The unaudited beginning balance is approximately $743,000 higher than projected in the current year budget and is a result of staff's diligence in conserving funds as well as revenues coming in slightly higher than anticipated. The majority of property taxes will be reflected in the 2nd quarter report. As of the 1st quarter, 73% of the budgeted amount of timber revenues in the General Fund was collected. The General Fund payroll for the 1st quarter is at 22.8% which is in line with where it should be at this point in the fiscal year. The slight increase in payroll over the previous fiscal year is a result of increased FTE, and a COLA increase. Overall, the General Fund is at 20.3% expended. The Commissioners expended $612.00 in the 1st quarter. Negotiations with the nurse's union that came to conclusion following the adoption of the budget resulted in a salary increase greater than the amount budgeted; however, some vacancies in staff positions as well as new hires have resulted in those increases being able to be absorbed into the existing budget. The Household Hazardous Waste facility is still an ongoing construction project which staff hopes to have completed in the current fiscal year. The Roads Admin & Support org unit is running slightly above the 25% for the first quarter due to the one time annual insurance payment that was made at the beginning of the fiscal year and came in approximately $2,300 higher than anticipated, staff will monitor this to see if savings can be realized in other areas to offset the increase. All other expenditures within the org unit are in line with where they should be at this point in the fiscal year. Road Maintenance & Construction is also slightly above the 25% percent mark which is a result of road oil and chemical purchases. The Equipment & Replacement Org Unit

has not yet purchased any of the budgeted equipment therefore expenses are well below the 25% mark. The Road District Budget is above the 25% mark because the funds that are available to transfer each quarter are transferred up to the amount budgeted into the General Roads Fund. Most of the remaining funds within the county are below the 25% amount for the 1st quarter, which is a result of many of these funds having budgeted contingencies. Those funds that are significantly above the 25% mark are a result of transfers that occurred in the 1st quarter to close out the fund or as in the case of the Debt Services fund a result of budgeted loan payments. Overall, funds continue to be in line was budgeted, and those that are running higher will continue to be monitored for other areas where savings may be realized. Through the 1st quarter due to some unanticipated costs associated with the settlement of the DA Union contract and an increase in grant funding that requires a county match, budget adjustments have been made in the amount of $102,600. This reduces the budgeted $1,989,400 contingency to $1,886,800. Steele told the Board that funds were appropriated to do an update to the county's existing Long-Term Financial Plan. In August, county staff distributed an informal request for proposals to five firms. The county received proposals back from two firms as well as a letter from one firm stating that they were not in a position at this time to provide the requested services. Moore and Steele reviewed the proposals and based on the information provided they selected the firm Talbert, Korvola & Warwick, LLP (TKW) to provide the services. Staff will be bringing a contract to the Board in the near future of a not to exceed contract with TKW in the amount of $35,050. Thompson said she is very curious about the Long Term Financial Plan and asked Steele what the timeline is for the progress of the review. Steele said they hope to bring the contract to the Board in January and are looking at a six month timeline. Thompson asked if there would be a broader participation in the development of the plan. Steele said the county's current plan has served the county well so TKW will be reevaluating the existing plan and making recommendations for improvements. Steele said the Board will be updated on a regular basis throughout the process. Moore said it is important to note that the current plan is working very well and it is accomplishing most of the county's goals. Thompson said she has concerns herself about the services that the county is delivering and is looking for a way to improve those services. Thompson asked if the Board would have input and Steele answered yes.

BUSINESS FROM THE PUBLIC

Carolyn Eady, 1990 S.E. Sheridan, Astoria. Eady said she is not interested in closing down the logging industry and knows it is an important part of the local economy. Eady gave the Board a copy of an article regarding the Linn County class action lawsuit. Eady has come to the conclusion that the lawsuit is a blatant attempt by a large forest industry to gain access to the last remaining state forest and have the state taxpayers pick up the tab. Eady said the money that Clatsop County could receive from this lawsuit is not free money and the timber companies have the most to gain. Edie said if the Board doesn't opt out they will be liable for legal costs.

Helen Westbrook, 2860 Log Bronc Way, Astoria. Westbrook said the Linn County lawsuit argues that money for trust counties was the primary focus of the 1941 legislation that was developed to let the State accept ownership from the counties of the burned and logged over forest lands. The Linn County lawsuit says the forest trust counties understood the phrase "greatest permanent value" to mean the greatest potential to generate revenues for counties and their local districts. Westbrook said neither Linn County nor the other class members consented to the greatest permanent value rule. Westbrook said there was an advisory committee that was

formed by the Department of Forestry to prepare the draft language on the purpose of the forest land and the concept of the greatest permanent value. The advisory group, including county commissioner representatives, worked on a draft and accepted testimony for more than a year. The draft was sent to the Board of Forestry who then held public hearings on the proposed draft language. Westbrook gave the Board letters written by Lincoln, Tillamook, Benton and Clackamas Commissioners in support of the draft plan. Westbrook also shared the Linn County Board of Commissioners Resolution supporting the Forest Management Plan that first implemented the 1998 Greatest Permanent Value language. Westbrook said that the idea that somebody pulled a fast one on the county and wasn't involved in the Greatest Permanent Value process is disingenuous.

Susana Gladwin, 82316 Hwy 103, Seaside. Gladwin asked the Commissioners to opt out of the Linn County lawsuit. Gladwin said if Clatsop County wins the suit then state forestry will be caught between a lawsuit that demands increased cutting. Gladwin said increased cutting will be damaging to streams which will lead to lawsuits from environmentalists. Gladwin said there is huge income generated to the county and it is not just from cutting trees. Gladwin hopes that Clatsop County opts out of the lawsuit.

CONSENT CALENDAR

Thompson moved and Clement seconded a motion to approve the consent calendar. Motion carried unanimously.

a. Board of Commissioners Regular Meeting Minutes 10-12-16 ..... {Page 15}
b. Board of Commissioners Regular Meeting Minutes 10-26-16 ..... {Page 23}

BUSINESS AGENDA

a. Authorize participation in MERS litigation

Reynolds said eleven counties have filed suit against Mortgage Electronic Registrations Systems (MERS). Clatsop County has been asked to join the lawsuit. MERS was set up so banks could transfer properties between themselves without having to pay the county for the filing fees. Clatsop County had over 10,000 deeds filed since 2011 where MERS is the named beneficiary. It is believed a significant number of those loans have transferred owners during the last 5 years. Clatsop County was not paid and the people who owned the property didn't know who their mortgage holder was. The county is still getting MERS filings and the lawsuit would prevent that and require them to pay for the fees. The cost of joining the lawsuit is $1500.00 as a retainer fee. Moore said the county may be missing between $35000-70000 a year. *Nebeker moved to authorize participation in litigation against MERS and approve the Contingency Fee Agreement with D'Amore Law Firm and approve the Common Interest Privilege Agreement and Thompson seconded. Motion carried unanimously.*

COMMISSIONERS' REPORTS

Thompson said she appreciates the members of the community who share their opinions and she plans to take these into account as the Board deliberates. Thompson said she participated in a rural trauma team development course at Tillamook hospital. Thompson said they are looking for ways to expand the capacity of global to organize and respond to catastrophic events. Thompson attended the Episcopalian Convention and discovered they have a disaster committee. All entities are willing to come together to address common concerns. Thompson spoke with John Rusiecki,

Emergency Communications Manager, about having a comprehensive unified system of emergency communications response in the county. It would look at the infrastructure and what it takes to maintain services to all the entities in the county.

Rohne attended a telephonic Northwest Senior & Disability Services meeting and learned they did not budget enough for PERS adjustments so they need to watch their budget so they can provide the best services with the money they have. Rohne attended the County's Farm and Forest Land Code Review, the planning staff hopes to use that review to look at residential agricultural areas and promote economic development on a small scale.

Nebeker attended the Astoria Music Festival Board meeting and said they are struggling financially. This festival has grown in quality and capacity which attracts people from long distances. They are trying to figure out ways to do more fundraising. Sergey Antonov, a cellist, comes from the east coast to perform at the festival. This festival brings a great deal of revenue to the county.

Clement met with Bruce Buckmaster from the Oregon Department of Fish & Wildlife Board to learn what has been happening. The Kitzhaber plan will be taking effect in 2017. Buckmaster believes that the plan won't happen and will ask for anyone to submit a better fishing method. Clement said Buckmaster could use a letter from the Board about Clatsop County's fishing industry.

Lee toured the Emergency Operations Center along with Governor Brown. Tom Horning who is a Geologist briefed the governor. Northwest Oregon Housing Authority (NOHA) achieved funding for three renovations. NOHA is trying to get the note for Clatsop Shores which will make the trust fund whole. NOHA is now considering keeping Clatsop Shores particularly if the trust fund collateral can be released. The merger may be complete in January. Lee attended the CREST meeting and handed out the response from the CREST attorney to Aiken Blitz. Blitz is representing the City of Warrenton to not remove the Eight Street Dam.

COUNTY MANAGER'S REPORT

Moore reminded the Board that in January will be the kick off of the Charter Review Committee. Applications are still being solicited from the public for the at large members and if the Commissioners feel comfortable they could begin making the appointments at the December 14th Board meeting. Moore is presuming the Board will hold interviews for the four at large seats.

ADJOURNMENT 6:49pm

Approved by,

_____

Scott Lee, Chairperson

Agenda Item # 6-C

Board of Commissioners
Clatsop County

AGENDA ITEM SUMMARY

December 14, 2016

Issue/Agenda Title: Payroll Services – Ceridian

Category: Consent Calendar

Prepared By: Monica Steele, Budget & Finance Director

Presented By: Monica Steele, Budget & Finance Director

Issue before the Commission: Consideration for the County to sign a new Master Services Agreement with Ceridian to further enhance the payroll services provided to the county by including a Human Resources component as well as increase employee usability.

Informational Summary: The County has been contracting with Ceridian Payroll services since 1997 and in November of 2006, pursuant to OAR 137-047-0275 and OAR 137-047-0285, exempted payroll services contracts from competitive bidding requirements.

With increased reporting requirements associated with the Affordable Care Act as well as other legislative changes associated with the processing/reporting of employee compensation including overtime, health benefits, taxes etc., the county is constantly trying to find additional efficiencies that will help reduce costs. In 2011 the county moved to Ceridian's web-based processing and was able to realize some efficiency in the payroll process. However, as technology continues to improve and workloads continue to increase, staff has researched additional methods to continue to make improvements on the processing of payroll that will help the county better utilize staff time.

One component to this updated payroll service would allow employees access to a portal that will enable them to address a lot of their own payroll questions without requiring staff time to help them, this would increase efficiencies for the Budget & Finance staff. An additional component will be to make the recruiting, hiring, and onboarding process for new employees an on-line process. The streamlining of this process will also increase efficiencies within the Human Resources department.

Fiscal Impact: There would be no fiscal impact in the 2016-17 fiscal year. Currently the county pays approximately $35,000 for annual payroll processing services, which have been budgeted accordingly within the Budget & Finance department's current year budget. By signing the proposed new contract the annual recurring cost would be approximately $60,500 with a one-time implementation cost of $43,485. The actual implementation of this contract won't take place until the 2017-18 fiscal year so these costs would be budgeted during the 2017-18 budget process. The recurring costs would be split

between the Budget & Finance and Human Resource departments. The one time implementation cost would be budgeted within the Special Projects fund.

Options to Consider:

1. Authorize the County Manager to sign the proposed Ceridian Master Services Agreement with an implementation start date of July 1, 2017.
2. Choose not to sign the proposed Ceridian Master Services Agreement until after the adoption of the 2017-18 fiscal year budget, which would in turn push off the implementation date as well as losing the proposed pricing that has been quoted and putting us in the 2017 pricing model that includes rate increases.
3. Don't sign the proposed Ceridian Master Services Agreement and continue with the existing payroll services the county has been using through Ceridian.

Staff Recommendation: Option #1

1. **Recommended Motion:** *"I move that the Board authorize the County Manager to sign the Master Services Agreement with Ceridian as presented."*

Attachment List:

A. Ceridian Master Services Agreement

CERIDIAN

MASTER SERVICES AGREEMENT

CLIENT INFORMATION				
Client Name(s) Clatsop County Oregon				the "Client"
Street Address 800 Exchange Street Suite 310		City Astoria	State/Province Oregon	Postal Code 97103
Primary Contact Monica Steele	Phone No. (503) 338-3609	Fax No.	e-mail msteele@co.clatsop.or.us	

PREAMBLE. As of the Effective Date, this Master Services Agreement will replace all service agreements currently in effect with respect to Client's Ceridian Services and will govern the Services contemplated herein and hereafter added in accordance with its terms. Notwithstanding the foregoing, as Client's existing Ceridian Services are to continue until the migration is complete, all existing service terms and conditions in respect of Client's existing Services will remain in full force and effect until the Service Start Date of those Services contemplated in the attached Service Exhibit.

1. DEFINITIONS AND INTERPRETATION. As used in this Master Services Agreement:

1.1 *"Affiliate(s)"* means a person that directly or indirectly controls, is controlled by, or is under common control with, a Party, where "control" means the possession, directly or indirectly, or the power to direct or cause the direction of the management policies of a person, whether through the ownership of voting securities, by contract or otherwise;

1.2 *"Agreement"* means this Master Services Agreement together with all Service Exhibits, Statements of Work, Pricing Schedules and other written documents made between Client and Ceridian which incorporate by reference or otherwise expressly contemplate the terms of this Master Services Agreement applying;

1.3 *"Business Day"* means any day of the year other than a Saturday, Sunday or a Statutory or civic holiday in the Territory(ies), but only to the extent such term refers to a Service being delivered in respect of such Territory;

1.4 *"Ceridian"* means the Ceridian entity that has signed this Master Services Agreement;

1.5 *"Ceridian Contractor"* means any person who is not a Party or an employee of Ceridian, who Ceridian contracts or otherwise engages to assist with or perform any part of the Services;

1.6 *"Ceridian Property"* means, collectively: (i) any and all systems, hardware, software, networks, online content, applications, source codes, specifications, templates, modules, devices, equipment, documentations or other property owned, licensed, leased, produced, designed, created or used by Ceridian as of the Effective Date or thereafter, whether for purposes of providing the Services pursuant to the Agreement or for any other purpose; (ii) all Confidential Information of Ceridian; (iii) all Materials; and (iv) any and all Intellectual Property in any of the foregoing or related thereto;

1.7 *"Client Data"* means any data of Client supplied by or on behalf of Client to Ceridian hereunder, or any such data created as a result of the processing of such data, included any data contained or embodied in Ceridian Property;

1.8 *"Confidential Information"* means any information identified by either Party and/or its Affiliates as "Confidential" and/or "Proprietary", or which, under the circumstances, ought to be treated as confidential or proprietary, including non-public information related to the disclosing Party's (and/or an Affiliate's) business, employees, service methods, software, documentation, financial information, prices and product plans;

1.9 *"Effective Date"* has the meaning set forth in Section titled "Term";

1.10 *"Fees"* means the fees payable by Client to Ceridian for the Services, as contemplated in Section titled "Fees" below, and/or any corresponding Pricing Schedule;

1.11 *"Including"* and *"Includes"* shall, wherever they appear in the Agreement, be deemed to be followed by the statement "without limitation", and neither of such terms shall be construed to limit any words or statement which it follows to the specific or similar items or matters immediately following it;

1.12 *"Intellectual Property"* means all intellectual property rights (including all copyrights, patents, trademarks, trade secrets, industrial designs and know how) and all applications, continuations, extensions, notices, licenses, sublicenses, agreements and registrations thereof in any jurisdiction;

1.13 *"Master Services Agreement"* or *"MSA"* means this written master services agreement and any exhibits, schedules, appendices or other attachments hereto;

1.14 *"Materials"* means all materials, forms, brochures, tip sheets, posters, and online content furnished by Ceridian to Client, and any derivatives thereof;

1.15 *"Parties"* means collectively Client and Ceridian, and each is a "Party";

1.16 *"Personal Information"* means information about an identifiable individual and which constitutes information governed by any applicable privacy or data protection law, statute or regulation;

1.17 *"Pricing Schedule"* means the written document agreed to between Ceridian and Client setting forth the applicable prices and fees to be paid by Client for the Services or Hardware, and whether attached hereto or attached to or incorporated into any Service Exhibit, Statement of Work or other written document;

1.18 *"Statement of Work"* or *"SOW"* means a written Statement of Work to be signed by both Client and Ceridian, setting forth in detail the work, services and deliverables to be provided by Ceridian in respect of any professional services work;

1.19 *"Service Exhibit(s)"* means the exhibit(s) attached hereto or executed subsequently describing the Service(s) to be delivered by Ceridian to Client;

1.20 *"Service Term"* means the term for a particular Service, as will be expressly set forth in the applicable Service Exhibit;

1.21 *"Services"* means, collectively, the services by Ceridian to Client under the Agreement, as such services are more particularly described in a Service Exhibit or a Statement of Work, and each is a "Service";

1.22 *"Service Start Date"* means, in respect of a Service, the Service Start Date as defined in the applicable Service Exhibit or SOW (as applicable);

1.23 *"Software"* means any software program(s) licensed or provided by Ceridian to Client through which the Service will be provided, as such Software may be more particularly described in a Service Exhibit or Statement of Work;

1.24 *"Taxes"* means all sales taxes, value added taxes, goods and services taxes, business transfer taxes, withholding taxes or any other taxes now or hereafter levied or imposed by any governmental authority by reason of or with respect to the provision of the Services to Client, but, for certainty excluding Ceridian's taxes for income derived under the Agreement; and

1.25 *"Territory"* means the territory or territories in respect of which a Service is to be delivered, as identified in the applicable Service Exhibit.

2. SERVICES

2.1 Ceridian shall provide the Service(s) to Client as more particularly set forth in the Service Exhibit(s). Client acknowledges and agrees that certain Services or parts thereof may be subcontracted by Ceridian to Ceridian Contractors, including Affiliates of Ceridian. However, regardless of any such subcontract, Ceridian shall remain solely liable for performance of the Services and all of its obligations hereunder.

2.2 All Services are provided to Client on the strict condition that they are used for Client's own internal business use within the respective Territory or Territories and not for re-sale by Client or for any use by Client that would constitute providing a service for third parties. However, and notwithstanding the above it is agreed that the Services may be used by Client's Affiliates provided that:

2.2.1 the Services are used by Client and/or its Affiliates only within the respective Territory in which Ceridian has agreed to provide such Service;

2.2.2 Client shall remain liable for the acts and omissions of all of its Affiliates as if the acts and omissions were acts and omissions of Client;

2.2.3 any loss or damage arising in connection with the Services incurred by such Client Affiliate shall be actionable by Client as if such loss and damage were incurred by Client, but shall not be actionable by Client's Affiliate directly against Ceridian or any Ceridian Contractor;

2.2.4 such Affiliate shall be deemed to have agreed to comply with all covenants and obligations on the part of Client herein, and agreed that Ceridian shall be entitled to all of the rights and benefits granted herein, as if such Affiliate has been a signatory to the Agreement;

2.2.5 Client shall be jointly and severally liable with the Affiliate for any and all Fees and other charges, arising as a result of such Affiliate's use of the Services, including any consequent increases in transactions, user numbers, set-up requirements, data records or Service provision; and

2.2.6 as a condition of allowing the Affiliate to access or continue to use the Services, Ceridian may, but shall not be obliged to, require the Affiliate to execute such documentation as reasonably required by Ceridian to confirm the Affiliate's agreement to the terms hereof.

2.3 Any work or services to be delivered by Ceridian which are not described in a Service Exhibit shall be described in a Statement of Work. However, and for the avoidance of doubt, if for any reason Client avails itself of work or services provided by Ceridian which are not specifically identified in a Service Exhibit or Statement of Work, such work will be provided subject to the terms and conditions of this Master Services Agreement, and at Ceridian's then current price for such additional work or services. The scope of services in a Statement of Work may be amended from time to time upon mutual agreement in writing by the Parties. Ceridian shall assign employees or subcontractors qualified to perform such professional services work, who shall exercise due professional care and competence in the performance of such Services.

2.4 Client shall:

2.4.1 furnish qualified personnel to work with Ceridian personnel in the execution of each Statement of Work;

2.4.2 supply adequate resources and information as mutually agreed upon;

2.4.3 notify Ceridian in writing of any request for changes to the Statement of Work;

2.4.4 review and accept or reject each deliverable within ten (10) Business Days of notification by Ceridian of completion of such work, or within such other time frame (and/or in such manner) as may be expressly contemplated in a Statement of Work, such acceptance not to be unreasonably withheld. Subject to any express acceptance criteria to the contrary set forth in a Statement of Work, each deliverable will be deemed to be accepted by Client on the tenth (10th) Business Day after notification by Ceridian of completion of such work, unless Client has provided Ceridian (within such 10 Business Day period) with written notice rejecting such work and specifying the manner in which the deliverable is defective; and

2.4.5 during the Service Term and for one year thereafter, not to intentionally solicit the services of any Ceridian employees who were involved in the performance of such Services.

3. TERM AND TERMINATION

3.1 Term. This Master Services Agreement will become effective when signed by Client and by Ceridian (the "Effective Date"), and shall continue until terminated in accordance with the terms hereof. The Service Term for each particular Service shall commence on the Service Start Date and continue for the length of the Service Term expressly set forth in the specific Service Exhibit. While Ceridian will use commercially reasonable efforts to meet the anticipated Service Start Date, the Parties acknowledge that implementation timelines have been estimated in good faith and Client shall not be entitled to any compensation for loss resulting from a failure to meet such estimated time frames.

3.2 Termination. The Agreement (or at the option of the Party exercising the termination right, only the affected Service Exhibit) may be terminated as follows:

3.2.1 immediately by Ceridian without further notice to Client, if Client fails to pay any Fees when due, and such failure continues for a period of seven (7) Business Days after Ceridian provides Client with written notice of such breach;

3.2.2 by either Party if the other Party fails to perform, or is otherwise in default of, any one or more of its material obligations under the Agreement (except failure by Client to pay Fees, when the provisions of the preceding subsection shall prevail), and fails to remedy such failure within thirty (30) days after receiving written notice of default from the non-defaulting Party specifying the particulars of the breach and expressly referring to the threat of termination under this subsection, or if such breach is of a nature that it cannot be reasonably remedied within such 30-day period, then if the Party fails to commence to remedy such breach within such 30-day period or thereafter fails to proceed diligently to remedy such breach;

3.2.3 immediately by either Party if the other Party is, or is deemed for the purposes of any law to be, unable to pay its debts as they fall due or insolvent, or any corporate action, legal proceedings or other procedure or step is taken against Client in relation to or with a view to winding-up, dissolution, administration, reorganization (in each case, whether out of court or otherwise) in respect of Client / Affiliate or any of its assets, or any analogous procedure or step is taken in any jurisdiction; or

3.2.4 upon written notice by either Party, if the Service Term for every Service has expired (without being renewed or continuing in accordance with the terms of the Service Exhibit), or has otherwise been terminated as permitted in accordance with the terms of the Agreement.

4. FEES AND PAYMENT

4.1 Fees. Client will pay the Fees plus all applicable Taxes, in the amounts and in accordance with the payment terms and processes set forth in the Service Exhibits, Statement of Work and/or Pricing Schedule. Any Taxes imposed on any transactions between Client and Ceridian contemplated under the Agreement shall be the subject of an additional charge and shall be shown separately on any invoice or similar document together with the required tax registration numbers, and paid by the party at the same time as the party pays the amount in respect of which such Taxes are payable. All Fees (and applicable Taxes) for Services provided within a Territory are the sole responsibility of Client and will be invoiced to, and payable by, the local Client entity located in such Territory. However, in the event that Services are invoiced to a Client entity from a Ceridian entity outside of the Territory in which Client entity receiving such Services is located, Client entity shall remit payment to the Ceridian entity issuing the invoice and shall be solely responsible to self-assess for all Taxes relating to such Services to the extent such Taxes are not paid to Ceridian.

4.2 Expenses. Client shall, in addition to all Fees, reimburse Ceridian for all reasonable expenses (in accordance with Ceridian's then current expense policy) incurred in connection with the implementation and provision of the Services, including travel, accommodation and meals. Ceridian will where reasonably practical advise Client prior to incurring such expenses and obtain Client's prior approval for same. Travel and subsistence will be charged from the location from which the respective Ceridian employee performing the work is based, to the required place of work, and Ceridian will endeavor to direct staff for most appropriate use of skills and economy of expense.

4.3 Late Fees. Ceridian may charge a late payment fee in the amount of 1% per month for late payments made by Client. Client agrees to pay late payment fees including all costs of collection (including reasonable legal fees and expenses). If Client fails to comply with any of the terms of payment for more than seven (7) Business Days after receipt of a written demand for payment, Ceridian may, in addition to any other right available to it, suspend performance of all or any part of its Services.

4.4 Currency. All Fees are payable in the currency stated in the relevant Pricing Schedule and shall be remitted to Ceridian in that currency. If remitted in another currency and/or from outside the Territory, sufficient funds must be remitted such that the net sum received by Ceridian in the requisite currency after foreign exchange and other bank charges is that stated on the relevant invoice. Ceridian will be entitled to invoice Client for any shortfall.

5. CONFIDENTIALITY AND PRIVACY

5.1 Non-Disclosure. Neither Party shall disclose Confidential Information of the other Party except as permitted in accordance with the terms of the Agreement. The receiving Party shall use the same degree of care as it uses to protect its own Confidential Information of like nature, but no less than a reasonable degree of care, to maintain in confidence the Confidential Information of the disclosing Party. The foregoing obligations shall not apply to any information that (i) is at the time of disclosure, or thereafter becomes, part of the public domain through a source other than the receiving Party; (ii) is subsequently learned from a third party that does not impose an obligation of confidentiality on the receiving Party; (iii) was known to the receiving Party at the time of disclosure; (iv) was generated independently by the receiving Party; or (v) is required to be disclosed by law, subpoena or other legal process. Ceridian may transfer Client's Confidential Information to a governmental agency or other third party to the extent necessary for Ceridian to perform its obligations under the Agreement or if Client has given Ceridian written authorization to do so.

5.2 Compliance. Ceridian and Client each hereby represent that they have taken commercially reasonable steps to ensure that they will at all times be in compliance with all applicable laws relating to privacy and the collection, use and disclosure of Personal Information relating to the Services. Ceridian and Client each hereby represent that any Personal Information provided by it to the Other Party under the Agreement has been and shall be collected, transferred and/or disclosed in compliance with such privacy laws (including obtaining the proper consent where applicable). In addition, each Party agrees to provide reasonable cooperation to the other in the instance that the other Party is subject to an inquiry by a data protection authority, the scope of which includes operations or information within the assisting Parties' control.

5.3 Use and Retention. Ceridian acknowledges that it is receiving Personal Information in connection with the performance of Services it provides under the Agreement. Ceridian shall not use or disclose Personal Information without Client's permission for any purpose other than fulfilling its obligations under the Agreement. Ceridian acknowledges that Client determines the purpose and means of the processing of the Personal Information delivered to Ceridian under the Agreement. As such, Ceridian shall only process such Personal Information in accordance with instructions received through Client, and Client hereby gives Ceridian permission to use, transfer and process such Personal Information obtained by Ceridian in connection with the Services as necessary to perform the Services (as used in this Section, the "Purpose"). Personal Information will not be retained for longer than necessary to accomplish the Purpose for which it was collected, and Ceridian will correct such Personal Information as directed by Client. In addition, Ceridian will promptly notify Client of any request for access to Personal Information received by Ceridian hereunder, unless prohibited by law.

5.4 Personal Information. Client acknowledges and agrees that Ceridian may transfer or disclose such Personal Information to its employees or other representatives and Ceridian Contractors, provided that such transfer or disclosure is limited to those parties who Ceridian reasonably requires to access such information for the Purpose, provided that such parties have confidentiality obligations with respect to the Personal Information at least as protective of the obligations contained herein, whether by contract or operation of law. Client further acknowledges and agrees that it is responsible for ensuring all Client Data housed within the live production environment of the Software is handled in accordance with applicable privacy laws, it being understood that Ceridian has no responsibility for the Client Data input or housed by Client therein.

5.5 Injunctive Relief. The receiving Party acknowledges and agrees that any breach by it or by any of its agents, representatives or employees of the provisions hereof may cause irreparable harm to the disclosing Party and that actual damages may be difficult to ascertain and in any event may be inadequate. Accordingly, in the event of such breach, the Disclosing Party shall be entitled to temporary and/or permanent injunctive relief against the receiving Party and/or its agents, representatives and employees (in addition to such other legal or equitable remedies as may be available), without the necessity of proving irreparable harm or actual damage to the disclosing Party.

6. INTELLECTUAL PROPERTY

6.1 Ownership of Intellectual Property. Each Party shall remain the owner of all Intellectual Property it owns prior to the Effective Date and that which it creates in the performance of its obligations under the Agreement. As between the Parties and vis à vis any third party, Ceridian is and shall remain the sole and exclusive owner of all Ceridian Property and any and all components thereof, whether owned on the Effective Date or acquired thereafter, and Client is and shall remain the sole and exclusive owner of Client Data and any and all components thereof. Forthwith upon the expiration or termination of the Agreement or any Service Exhibit, as the case may be, each Party shall forthwith return to the other Party, all such property in its possession or control relating to Agreement or terminated Service Exhibit, as the case may be.

6.2 Right of Use. Ceridian hereby grants to Client, starting on the Effective Date and continuing for so long as required for a Service, the right to access and use the Software and such other Ceridian Property as may be required for Client to receive and use the Services internally within the Territory, subject to and in accordance with the following terms:

6.2.1 the Software and Ceridian Property is provided solely for the purpose of enabling Client to receive and use the Services, and without limitation, Client shall not use it in any manner that would be illegal, offensive or damaging to Ceridian or any third party;

6.2.2 Client shall not assign, transfer, sublicense, charge or otherwise deal in, encumber or make available to any third party the Software or Ceridian Property, and any attempt to do so shall be null and void and shall constitute a material breach of the Agreement;

6.2.3 Client is responsible for all activities that occur in the accounts of its employees and agents, and for compliance by such parties with the Agreement, and shall use commercially reasonable efforts to prevent unauthorized access to, or use of, the Services, as well as notify Ceridian promptly of any such unauthorized access or use;

6.2.4 to the extent the Software or Ceridian Property is licensed to, or otherwise in the possession or under the control of, Client, then Client agrees not to modify, merge, copy, disseminate, display, disassemble, reverse engineer, tamper with, or otherwise attempt to decrypt or derive the source code, any trade secrets or any proprietary information or create any applications or any derivative works thereof.

6.3 Indemnity for Infringement. Ceridian will indemnify and hold Client harmless from and against any and all claims alleging that the Services and any Intellectual Property furnished by Ceridian violate any third party's United States or Canadian patent, trade secret or copyright, except to the extent that such claims arise from Client's modification of the Services or Intellectual Property or from Client's use of such Services in excess of the provisions set out in this Section. However, Ceridian's liability hereunder shall be conditional upon Client providing Ceridian with timely written notice of any such claim or threat thereof,

and the full and exclusive authority for, and information for and assistance with, the defense and settlement thereof. If such claim has occurred, or in Ceridian's opinion is likely to occur, Client agrees to permit Ceridian, at its option and expense, either to procure for Client the right to continue using the Intellectual Property, or replace or modify the same so that it becomes non-infringing. If neither of the foregoing alternatives is reasonably available, Ceridian may immediately terminate its obligations (and Client's rights) under the Agreement with regard to such Intellectual Property (if the Services are deliverable without such Intellectual Property) or terminate the Agreement in its entirety (to the extent Ceridian is not able to provide the Service without such Intellectual Property).

7. DISPOSITION OF DATA

7.1 Record Retention. Except as otherwise expressly provided for herein or in a Service Exhibit, Ceridian will not be responsible for storing copies of Client's records when Ceridian no longer requires such information to provide Services to Client, and Client shall be responsible for retaining its own business records according to the schedules established by governmental authorities for Client. Client will reimburse Ceridian for the costs of producing any information in Ceridian's possession or control relating to Client's business or employees that Ceridian produces in response to a Client request or court order. Unless otherwise required by law, upon termination of the Agreement, Ceridian may dispose of Client's records and data in accordance with Ceridian's data retention policy in effect from time to time (but in compliance with all privacy laws as contemplated in Section titled "Confidentiality and Privacy" hereof). In the case of termination of one but not all Services, Ceridian may dispose of Client's records and data not related to the remaining Service(s), unless otherwise required by law, in accordance with Ceridian's data retention policy in effect from time to time (but in compliance with all privacy laws as contemplated in Section titled "Confidentiality and Privacy" hereof). In no event will Ceridian destroy any file containing the only record of Client's data or information stored in the Software without providing Client with reasonable notice of its intention to do so and a reasonable opportunity to transfer or arrange for the transfer of such file to Client or a third party.

8. REPRESENTATIONS AND WARRANTIES

8.1 Ceridian's Representations and Warranties. Ceridian represents and warrants to Client as follows:

8.1.1 it has all the requisite authority to enter into the Agreement and is lawfully entitled to supply the Services to Client in the manner contemplated herein;

8.1.2 it will use all reasonable skill and care in accordance with industry practice in the course of performing the Agreement; and

8.1.3 it will comply with all laws and regulations applicable to it relating to the provision of the Services in the Territory.

8.2 Client's Representations and Warranties. Client represents and warrants to Ceridian as follows:

8.2.1 it has all the requisite authority and is lawfully entitled to enter into the Agreement; and

8.2.2 it will comply with its obligations as set out in the Agreement, including any associated Service Exhibits and will provide all reasonable cooperation to Ceridian in the performance of the Agreement.

8.3 Exclusions. The express and limited representations and warranties provided in the Agreement comprise all of the representations and warranties made with respect to the Services, products, Intellectual Property and other items provided, furnished, licensed, leased or otherwise made available or performed to Client by Ceridian pursuant to or in relation to the Agreement. Any further or other warranties or conditions, whether express or implied, are expressly excluded to the extent permitted by law. Without limiting the foregoing, Ceridian does not warrant that, to the extent the Services require computer software or Services delivered using computer software, the provision of those Services will be entirely error free or will run uninterrupted.

9. LIMITATIONS OF REMEDIES

9.1 To the maximum extent permitted by applicable law, Client agrees that Ceridian's total maximum aggregate cumulative liability (including that of Ceridian's Affiliates and Ceridian Contractors) to the Client, its Affiliates and other related parties (collectively in this Section referred to as the *"Aggrieved Parties"*) for all past, present and future claims, demands, actions, causes of actions, requests, lawsuits, judgments, damages, costs, expenses, prejudices or losses (collectively in this Section referred to as the *"Claims"*) in relation to or arising under this Agreement (whether for breach of contract, strict or statutory liability, negligence or any other legal or equitable theory) shall be limited to the Aggrieved Parties' actual direct damages and shall not, under any circumstances, exceed, in the aggregate, for all Claims past, present and future, the greater of: (i) the total amount paid by the Client (and any Affiliates) for the defective Services causing the damages during the 12 months immediately preceding the loss; or (ii) $50,000. This remedy shall be the Aggrieved Parties' sole and exclusive remedy against Ceridian, any Ceridian Affiliate and Ceridian Contractor. However, the above limitation of liability shall not apply to Claims relating to the following:

9.1.1 death or personal injury resulting from that Party's negligence;

9.1.2 that party's fraud or statements made fraudulently;

9.1.3 any Claim for indemnity by the Client under Section 6.3 (IP Infringement); and

9.1.4 any acts or omissions for which the governing law prohibits the exclusion or limitation of liability.

9.2 To the maximum extent permitted by applicable law, and notwithstanding anything to the contrary contained in this Agreement, neither Ceridian nor any of its Affiliates shall be liable for any indirect, consequential (including damages for business interruption or loss of business information or data), special, punitive, exemplary or incidental damages, claims by third parties, or damages for loss of profits, goodwill, anticipated savings or revenues, arising in relation to or under this Agreement, even if advised of the possibility of such damages or if the possibility of such damages was reasonably foreseeable.

10. CHANGES

10.1 Changes to Legislation. In the event of a change to any federal, state, provincial or other applicable law or regulation affecting the Services, or any reasonably unforeseen change materially affecting the cost of providing the Services, Ceridian may make changes to the Agreement with thirty (30) days' prior written notice to Client. If, upon notification of the change, Client elects not to continue the Services, then notwithstanding anything to the contrary in the Agreement, Client may terminate the Agreement upon thirty (30) days' prior written notice without penalty or cancellation fees.

10.2 Changes to Service. Client acknowledges and agrees that in order to maintain flexibility in the business, Ceridian reserves the right to make changes to the Services or the manner in which they are delivered, at any time and from time to time, as Ceridian considers reasonable and/or necessary (including changes to improve such Services and/or necessary to reflect legislative changes), provided that such change does not materially adversely impact the Services being delivered to Client.

11. NOTICES

11.1 All notices to the Parties shall be in writing (including fax or similar writing) and shall be sent to Client at the address set forth on the first page of the Agreement, and to Ceridian to the attention and address of Client's account representative (if any) or to the local Ceridian service center or to such other address or fax number as either Party may hereafter specify by written notice to the other Party. Each such notice, request or communication shall be effective upon receipt, provided that if the day of receipt is not a Business Day, then the notice shall be deemed to have been received on the next succeeding Business Day.

12. FORCE MAJEURE

12.1 Neither Party nor their respective Affiliates (nor Ceridian Contractor) shall be held liable or responsible to the other Party nor be deemed to have defaulted under or breached the Agreement for failure or delay in fulfilling or performing any term of the Agreement (except for the failure to pay money) when such failure or delay is caused by or results from causes beyond the reasonable control of the affected Party.

13. BUSINESS CONTINUITY PLAN

13.1 Ceridian covenants, represents and warrants that it has developed, and will keep current a formal business continuity plan which details strategies for response to and recovery from potential disasters that could disrupt Ceridian's operations and timely delivery of the Services.

14. GENERAL PROVISIONS

14.1 The Agreement and the Parties' rights and obligations shall be governed by the laws of Minnesota and all federal laws applicable therein.

14.2 Either Party may assign its rights and obligations under the Agreement without the consent of the other Party: (i) to an Affiliate of the assigning Party or to a partnership, limited liability company, joint venture or other similar legal entity, of which at least 50% of the equity interests are owned directly or indirectly by the assigning Party or any parent entity, but no such assignment shall release the assigning Party, and such Affiliate or successor entity shall be jointly and severally liable under the Agreement; or (ii) to any successor to its business, or a substantial part thereof, whether through merger, amalgamation, consolidation, divestiture or sale, provided that the proposed successor entity is not a primary competitor of the other Party. Further, Ceridian may without the consent of Client and without regard to any other limitations set forth in the Agreement, assign its rights in the Agreement and any related documents, including the right to receive payment and require performance from the Client, in connection with any financing or other capitalization provided to Ceridian and/or any of its Affiliates. Any other transfer or assignment of the Agreement or any rights hereunder requires the prior written consent of the other Party, which consent may not be unreasonably withheld or delayed. The Agreement shall enure to the benefit of and be binding upon the Parties hereto and their respective successors and permitted assigns. Upon request of the non-assigning Party, any permitted assignee shall execute an agreement in writing with the other Party hereto assuming all obligations of its assignor under the Agreement. Any purported assignment in contradiction of this Section shall be null and void and be of no force or effect.

14.3 In the case of any conflict between the main body of the Agreement which are applicable to all Services, and the terms applicable to only one or more particular Service(s) as set forth in any Service Exhibit, Pricing Schedule or Statement of Work, the terms of the Service Exhibit, Pricing Schedule or Statement of Work shall govern, but only with respect to the particular Services and/or Territory to which the Service Exhibit, Pricing Schedule or Statement of Work relates. Notwithstanding the foregoing, Section 5 ("Confidentiality and Privacy"), Section 6 ("Intellectual Property"), Section 7 ("Disposition of Data") Section 8 (" Representations and Warranties") and Section 9 ("Limitations of Remedies") of this Master Services Agreement may not be overridden or amended by the Parties (and all such amendments shall be deemed void) unless approved in writing by each Party's legal counsel.

14.4 No action under the Agreement may be brought by either Party more than two years after the cause of action has accrued.

14.5 No delay or indulgence by either Party at any time, to enforce any of the provisions of the Agreement, or any right with respect thereto, shall be construed as a waiver of such provision or right, nor shall it prejudice or restrict the rights of that Party. A waiver of its rights shall not operate as a waiver of any subsequent breach. No right, power or remedy conferred upon or reserved for either Party is exclusive of any other right, power or remedy available to that Party and the rights, powers and remedies shall be cumulative.

14.6 The Agreement may be signed in counterparts, including by way of facsimile or .pdf transmission, with the same effect as if both Parties had signed the same document, and a facsimile or pdf copy shall be considered *prima facie* evidence of the of the information contained in the facsimile or pdf transmission.

14.7 The Parties have expressly requested that the Agreement be drawn up in the English language. Les parties aux présentes ont expressément requis que cette convention soit rédigée en anglais. Expresamente las Partes del presente Contrato solicitan que este documento sea redactado en el idioma Inglés. In the event of any contradiction, discrepancy or difference between the English language version and the French or Spanish versions (if any) of the text of this document, or any documents contemplated or referenced hereunder, the English language version shall govern.

14.8 Any provision of this Agreement which is unenforceable in any jurisdiction shall, as to such jurisdiction, be ineffective to the extent of such prohibition or unenforceability without invalidating the remaining provisions and any such prohibition or unenforceability in any jurisdiction shall not invalidate or render unenforceable such provision in any other jurisdiction.

14.9 Headings in the Agreement are for ease of reference only and will not affect its interpretation.

14.10 All amounts payable under the Agreement shall be payable in lawful currency as specified in the Service Exhibit and/or Pricing Schedule, or if no such currency is specified, then the currency shall be deemed to be the lawful currency of the Territory in which the Service is being provided.

14.11 If more than one entity has signed this Agreement for the same Party, or an entity has signed for and on behalf of another entity in addition to itself, the covenants of all such entities shall be considered to be joint and several and shall apply to each of them. Additionally, should any one or more of such entities wish to amend this Agreement, or add or remove Services, it may do so separate and apart from the other entities of the same Party; provided however that: (i) the amendment or change to the Services shall only apply in respect of such entity(ies), and (ii) the entities comprising the Party shall only be jointly and severally liable in relation to the terms and Services common to such entities.

14.12 The Agreement constitutes the entire agreement between the Parties with respect to the subject matter hereof, and supersedes all prior or contemporaneous agreements and understandings regarding the subject matter hereof, whether written or verbal. Any amendment to the Agreement must be in writing and signed by authorized representatives of both Parties.

14.13 For the avoidance of doubt, the legal entities which have signed this Master Services Agreement and collectively comprise Client, operate in either Canada or the United States. In this regard, the Parties acknowledge and agree that those Client entities situated in Canada shall receive the Services applicable only to Canada (with applicable Territory being indicated in the Service Exhibit and/or Pricing Schedule) from Ceridian Canada Ltd. and/or another Ceridian Canadian Affiliate (and be billed directly from same), and conversely that those Client entities situated in the United States shall receive the Services applicable only to the United States from Ceridian HCM, Inc. and/or another Ceridian US Affiliate (and be billed directly from same).

Client hereby consents to Ceridian conducting credit investigations, from time to time, including such requests for and exchange of information to and from consumer reporting agencies or credit grantors as it may require to approve and maintain any funding arrangements to be granted by Ceridian in relation to the Services, and to provide payment history information to such agencies. Client acknowledges that the Agreement is conditional upon funding approval of Client. Client further acknowledges having read and understood all terms of this document, which are set forth on this page and the preceding pages, all of which form an integral part of the Agreement between Ceridian and Client if this Agreement is accepted by Ceridian, such acknowledgement being conclusively evidenced by Client's signature below.

Ceridian HCM, Inc.

Per: {{_es_signer2_signature}}

Printed Name: {{_es_signer2_fullname}}

Title: {{_es_signer2_title}}

Date: {{_es_signer2_date}}

I have the authority to bind the corporation

Clatsop County Oregon

Per: {{_es_signer_signature}}

Printed Name: {{_es_signer_fullname}}

Title: {{_es_signer_title}}

Date: {{_es_signer_date}}

I have the authority to bind the corporation/partnership

CERIDIAN

SERVICE EXHIBIT

CERIDIAN DAYFORCE HUMAN CAPITAL MANAGEMENT

SERVICE TERM: 36 Months

TERRITORY: United States

CLIENT INFORMATION				
Client Name Clatsop County Oregon				the "Client"
Billing Street Address 800 Exchange Street Suite 310		City Astoria	State/Province Oregon	Zip/Postal Code 97103
Service Contact Monica Steele	Phone No. (503) 338-3609	Fax No.	e-mail msteele@co.clatsop.or.us	

1. SERVICE EXECUTIVE SUMMARY

Ceridian shall provide Client with Ceridian Dayforce Human Capital Management Services within the Territory, consisting of access to and use of the Subscribed Modules, in conjunction with those Services as further described in this Service Exhibit.

Client's use or non-use of any particular function does not impact its availability or the Fees payable.

2. CAPITALIZED AND DEFINED TERMS

2.1 All capitalized terms used herein and not defined shall have the same meaning as in the Agreement.

2.2 As used in this Service Exhibit:

2.2.1 *"Annual Inflation Index"* means (i) in the case of the United States, the Employment Cost Index: Total Compensation: All Works: Civilian, Not Seasonally Adjusted (ECI), as published by the Bureau of Labor Statistics, US Department of Labor; and (ii) in the case of Canada, the Consumer Price Index, as published by Statistics Canada, Government of Canada;

2.2.2 *"Ceridian Clocks"* means clocks, hardware and other ancillary products, sold by Ceridian to Client as part of the Services, as set forth in the attached Pricing Schedule;

2.2.3 *"Documentation"* means all documentation relating to the Software, whether in machine-readable or printed form, provided by Ceridian to Client, including any updates, revisions, new versions, and supplements to the Documentation;

2.2.4 *"Funding Authorization"* means such written authorization, power of attorney or other form executed by Client from time to time as reasonably required by Ceridian to authorize and permit Ceridian to withdraw money, forward payments or take other steps to facilitate the movement of payments as part of the Service;

2.2.5 *"Funds"* means those funds to be received by Ceridian from Client, in an amount equal to the Payments to be made for a particular Payroll;

2.2.6 *"Modifications"* means any error corrections, modifications or enhancements to the Software that are included by Ceridian in Support of the Software to all customers;

2.2.7 *"New Versions"* means new versions of the Software that may be deployed by Ceridian to Client for license pursuant to this Service Exhibit;

2.2.8 *"Number of Employees"* means the number of employee records in the Software that do not have a terminated status, including full-time and part-time employees as well as any contingent labor or contractors, or any other individual in respect of whom information is being recorded in a Subscribed Module, and all administrators or other users who are accessing the Software or database relating to the Services (for the purposes of this Service Exhibit, each shall be considered an "Employee");

2.2.9 *"One Time Fees"* means those Fees set forth in the Pricing Schedule under the heading "One Time Fees", including those Fees payable for the implementation and training Services, or are otherwise identified or understood to be one time or non recurring Fees, including any Fees payable with respect to change orders;

2.2.10 *"Payments"* means the payments to be made by Ceridian on Client's behalf hereunder, in respect of wages to its Employees, statutory remittances, tax filing liabilities and other third party payments as directed by Client and agreed to by Ceridian;

2.2.11 *"Payroll"* means the payroll of Client processed or to be processed by Ceridian with which the Service is associated;

2.2.12 *"Rate Sheet"* means the document that itemizes those ancillary services offered by Ceridian to its clients at the then current rate, not otherwise stated in the Pricing Schedule;

2.2.13 *"Recurring Fees"* means those Fees set forth in the Pricing Schedule under the heading "Recurring Fees", or are otherwise identified or understood to be Fees which are payable on the periodic recurring basis stated in the Pricing Schedule;

2.2.14 *"Service Start Date"* means the service start date as set forth in the Pricing Schedule;

2.2.15 *"Services"* means, collectively, access to the Subscribed Modules, together with all other Services described in this Service Exhibit;

2.2.16 *"Software"* means the software program(s) licensed by Ceridian to Client through which the Service will be provided, together with all Modifications and New Versions;

2.2.17 *"Subscribed Module(s)"* means, at a given date, the module(s) to which Ceridian will provide Client access as part of the Service and as set forth in a written Statement of Work ("SOW"), signed by both Ceridian and Client;

2.2.18 *"Support"* means the support and maintenance services provided by Ceridian to Client with respect to a Subscribed Module in accordance with this Service Exhibit;

2.2.19 *"Tax Forms"* means those forms, as supported by Ceridian's Software, as prescribed by Taxing Authorities from time to time which are required to be provided by Client to the Employees in connection with the remuneration paid or payable to the Employees;

2.2.20 *"Taxing Authorities"* means those government agencies to which tax remittances are made relating to compensation paid by Client to Employees, and any successors to such agencies, or those government agencies to which data is required to be reported; and

2.2.21 *"Trust"* means the trust established pursuant to a written declaration of trust for the purposes of receiving Funds from its clients, or such additional or replacement trust as may hereafter be established by Ceridian for the purposes of receiving Funds from its clients.

3. IMPLEMENTATION. The respective roles, responsibilities and other terms applicable for the implementation of the Service will be set forth in a written SOW, signed by both Ceridian and Client.

4. TRAINING. The respective roles, responsibilities and other terms applicable for any training of the Service will be set forth in a written SOW, signed by both Ceridian and Client.

5. SUBSCRIBED MODULES

5.1 Warranty. Client's election of the Subscribed Modules will be set forth in a written SOW, signed by both Ceridian and Client. Ceridian warrants that the Software shall substantially perform in accordance with the Documentation. Client's exclusive remedies for breach of this warranty are: (i) Client may request Support from Ceridian; and (ii) if the Support requested by Client does not enable the Software to comply with the warranty within a reasonable period of time, Client may seek direct damages for the affected Software, subject to the limitations of liability in the Agreement. Ceridian shall not be liable to remedy any claimed breach of this warranty due to the acts or omissions of Client or any third party. EXCEPT FOR THE LIMITED WARRANTY SET FORTH IN THIS SECTION, THE SOFTWARE IS PROVIDED "AS-IS" AND "AS-AVAILABLE". THE EXPRESS LIMITED WARRANTIES IN THIS SECTION ARE IN LIEU OF ALL OTHER WARRANTIES AND CONDITIONS EXPRESSED OR IMPLIED, CONTRACTUAL OR STATUTORY, INCLUDING ANY IMPLIED WARRANTIES OF MERCHANTABILITY OR FITNESS FOR A PARTICULAR PURPOSE.

5.2 Software Hosting and Support

5.2.1 Ceridian's Obligations.

(i) Uptime. Ceridian shall host and provide ongoing support for the Software and supported third party products from data centers accessible via the internet. Except for planned maintenance, the web-based application interface for the production environment that will be accessed through Client URL, shall be available, on average, 99.5% of the time each calendar month.

(ii) Support. For so long as this Service remains in effect, and provided that Client has paid the applicable Fees, Ceridian shall provide Support in accordance with the following:

(a) Ceridian will use commercially reasonable efforts, commensurate with the severity of the error, to correct any malfunction, defect or non-conformity in the operation of the Software from the Documentation (each, a "Defect") to enable the Software to substantially perform in accordance with the Documentation in effect at the time the Support is provided. Client shall report to Ceridian any Defects and Ceridian shall only be obligated to provide Support if Client submits to Ceridian all information, documentation, technical and other assistance to assist Ceridian;

(b) Ceridian shall not be obligated to provide Support if the Software is not used in accordance with the then current Documentation or if any Defect reported by Client is found by Ceridian to be due to the misuse, improper use, alteration, or damage of the Service, lack of training, or any other cause other than the Software as delivered by Ceridian. Client shall pay Ceridian, at Ceridian's then current hourly rates, for Ceridian's services in responding to a Client report of a Defect, if: (1) such Defect does not exist; (2) Client does not assist Ceridian as required; (3) the Software is not used in accordance with the Documentation; or (4) the Defect is not caused by the Software. If Ceridian may reasonably correct any such Defect, Ceridian may correct it and Client shall reimburse Ceridian for such correction at Ceridian's then current hourly rates;

(c) support may be provided to Client named support users through one or more of a number of means at Ceridian's reasonable discretion, such as telephone, e-mail, online meeting, or Internet self-service, which includes general technical information and assistance with problem determination, isolation, verification, and resolution during Ceridian's standard hours each Business Day. Support services are not to be used as an alternative to obtaining training. Client shall make commercially reasonable efforts to refer to the Documentation as a first step in answering questions and learning functions of the Service prior to contact with Ceridian with regard to problems or questions;

(d) a maximum of two (2) named persons (as indicated on the "Help Line" access list provided from time-to-time by Client to Ceridian) trained on the use and operation of the Software may have access to the Ceridian help line for problem resolution. Ceridian will use commercially reasonable efforts to perform all required maintenance to the Software (or any other elements of the hardware or infrastructure necessary for the provision of the Services contemplated under this Service Exhibit) during the planned maintenance window, which is currently Wednesdays and Saturdays between 1:15 a.m. and 5:15 a.m. Eastern Time. Ceridian will use commercially reasonable efforts to keep the period during which Client's access to the system is impeded during the maintenance period to a minimum. Ceridian will use commercially reasonable efforts to notify Client of all maintenance at least twenty-four (24) hours in advance. Ceridian will not be responsible for any damages or costs incurred by Client, if any, for scheduled down time. Ceridian may change its maintenance window upon prior notice to Client; and

(e) support provided under this Service Exhibit does not include services provided with respect to the following matters: (1) any problem resulting from configuration or customization of the Service (including any Professional Services) made by or at Client's direction and/or approval; or (2) any problem caused by modifications of the Software not made or authorized by Ceridian (other than ordinary configuration changes the functionality for which is built into the Software and intended to be made by Client).

(iii) Ceridian may from time to time (but shall not be required to) make changes to the Software and/or its functionality, for purposes such as maintenance or upgrades, or otherwise as deemed appropriate by Ceridian. Such changes are within the discretion of Ceridian, and are not required to be made, and in particular notwithstanding any intentions which may have been conveyed by Ceridian with respect to its possible plans for future functionality or features.

(iv) Ceridian will only provide Support in respect of Ceridian Clocks and will not provide Support or other assistance in respect of clocks or other hardware supplied by any other provider.

5.2.2 Client's Obligations.

(i) Client will not: (a) send spam or otherwise duplicative or unsolicited messages in violation of applicable laws; (b) send or store infringing, obscene, threatening, libelous, or otherwise unlawful or tortious material, including material that is harmful to children or violates third party privacy rights; (c) send or store any virus, worm, time bomb, Trojan horse or other harmful or malicious code, file, script, agent or program; (d) interfere with or disrupt the integrity or performance of the Service or the data contained therein; or (e) attempt to gain unauthorized access to the Service or its related systems or networks.

(ii) Client will designate named support users to triage all internal support incidents reported by end users. Triage occurring by Client support users includes: checking the Documentation for assistance in dealing with the reported incident, attempting to reproduce the incident

in a production copy, and documenting the steps required to reproduce the incident. Upon reporting an incident, Client agrees to cooperate, work closely with, and provide assistance to Ceridian in the investigation, diagnosis, and resolution of the incident.

(iii) Ceridian shall have the right to access Client's account from time to time, for purposes of Support, administration, invoicing and to inspect Client's utilization of the Services so as to ensure Client's compliance with the provisions of this Agreement, as reasonably necessary in Ceridian's sole discretion.

6. **ONGOING SERVICES AND SUPPORT.** The scope of ongoing / recurring Services outlined below provides a breakdown of the key functionality and deliverables to be provided, and the respective rights and obligations of Ceridian and Client.

6.1 Funds Transfer (Ceridian Bank Account)

6.1.1 Ceridian's Obligations for Ceridian Direct Deposit and Ceridian Check. Where Ceridian is responsible for issuing Payments using the Trust, Ceridian will:

(i) issue the Payments in accordance with the Payroll and Payment processing schedule, as agreed upon by the Parties, to meet Client's Payroll obligations, by way of: (a) submitting Payment information to the appropriate funds transfer network(s) in the form required for the electronic crediting/direct deposit of payment to the designated bank accounts of Employees; and/or (b) create negotiable paychecks to the order of Employees drawn on the Trust account. Each paycheck will be printed on Ceridian check stock with Ceridian officer's signature and Ceridian logo using the check data and account provided by Client;

(ii) process file reversals, request stop payment orders and request direct deposit reversals upon Client's written request;

(iii) process stop payments up to five (5) Business Days of settlement date and direct deposit reversals upon Client's written request on the day of receipt when request is received by 2:00pm Eastern Time;

(iv) at the request of Client or at Ceridian's option, provide Client a report identifying un-cashed paychecks considered stale dated, and pay to Client an amount equivalent to any Payroll Funds held on account of Payments against which stop payments have been placed, or which are, according to banking practice, considered to be stale-dated (less a reasonable administration fee; or at the request of Client, such Payroll Funds may be credited to Client's next Payroll);

(v) notify Client of exceptions related to paychecks processing and pre-notification rejections, bank requested notification of change requests, and returned credits related to direct deposit services ("Exceptions");

(vi) notify Client of any errors or other circumstances in the event Ceridian is unable to provide Payments and either re-performs Services (when possible) or arrange return of unpaid funds to Client. Unpaid Payroll Funds will be returned only after verification of available and sufficient fund balances (with time allowances for returned items) by the bank in which such funds are held;

(vii) establish and maintain the Trust for the purpose of holding and keeping Funds and other trust funds received from its clients separate from Ceridian's own property. For clarity, the principal amount of the Funds received by Ceridian from Client shall at all times while in the possession or control of Ceridian, be held in the Trust; and

(viii) monitor and interpret changes to those laws and regulations in the Territory pertaining to payroll gross-to-net calculations (including tax tables / tax rates), and modifying the Software and Services as required to incorporate such changes and ensure the Software performs all such calculations in compliance with the applicable laws and regulations.

6.1.2 Client's Obligations for Ceridian Direct Deposit and Ceridian Check. Where Ceridian is responsible for issuing Payments using the Trust, Client will:

(i) enter, maintain and transmit (via the Software) Payroll data to Ceridian, such number of days as established by Ceridian (acting reasonably) prior to the date the paychecks are to be issued and deposits are to be made, as required to meet agreed upon processing schedules, as set forth in the Funding Authorization;

(ii) review and audit all Payroll data, reports and other materials prior to committing the Payroll. Client shall correct any discrepancies or errors in such materials prior to the next scheduled processing;

(iii) monitor changes to those laws specifically applicable to Client's business, interpreting applicable laws and regulations, determining the requirements for compliance with such laws and regulations, and notifying Ceridian of any changes to the Payroll processing required as a result of such laws;

(iv) correct Exceptions before transmitting Payroll data for Client's next Payroll (otherwise Client could be in breach of applicable laws or regulations);

(v) be responsible for contacting payees to resolve payment of any voided paychecks and reimburse Ceridian for any losses and fees incurred by Ceridian in circumstances where Ceridian honors Client's request to initiate a stop payment order and issues a replacement check, but the check originally issued is subsequently presented for payment by a holder in due course (including fraud or misconduct on the part of Employees);

(vi) require Employees to complete, sign and maintain any account funding authorizations or other documents or authorizations necessary for Ceridian to provide Services, including authorizations for the initiation of credit entries. Without limitation, Client shall ensure that each Employee utilizing Ceridian's direct deposit service has authorized the initiation of credit entries and the crediting of the Employee account, as well as the debiting of the Employee account through a file reversal in the event of a returned item from Client's account or any funding deficiency by Client (to extent permitted by law). Client must ensure that such authorizations are operative at the time of transmittal and crediting/debiting of the Employee accounts;

(vii) hereby grant to Ceridian the authority to issue Payments on behalf of Client, and to take such other action as may be necessary from time to time in connection with the provision of the Services, which might authorize to instruct its bank to stop payment and authorize to refuse payment as required to provide the Services;

(viii) pay for all reasonable expenses incurred by Ceridian as a result of Client errors or omissions;

(ix) forward the Funds to an account established by the Trust as directed by Ceridian. The Funds will be provided by Client in a manner satisfactory to Ceridian (acting reasonably) and where Ceridian is debiting Client's account, Client will fully fund such account and authorize the initiation of debit entries and the debiting of the account in the amount and on the date specified, and ensure that such authorization is operative at the time of transmittal and debiting of Client account. Ceridian shall not be obliged to release any Payroll documents or to make or honor any Payments until it has received confirmation that Client's financial institution upon which the Funds have been drawn has irrevocably honored such request for advance of funds. In this regard, Ceridian reserves the right, at its option, to implement such procedures as may reasonably be required to guarantee the irrevocable receipt by it of the Funds prior to Ceridian paying out any such funds; and

(x) provide Ceridian with Funds in an amount equal to the tax liability Payments to be made for a particular Payroll.

6.2 Payment Solutions (Client Bank Account)

6.2.1 Ceridian's Obligations. Where Client elects to issue Payments using its own checks and / or drawn on its own bank account, Ceridian will:

(i) issue the Payments in accordance with the Payroll and Payment processing schedule, as agreed upon by the Parties, to meet Client's Payroll obligations, by way of: (a) submitting Payment information to the appropriate funds transfer network(s) in the form required for the electronic crediting/direct deposit of payment to Client's bank account; and/or (b) create negotiable paychecks to the order of Employees drawn on the Client's bank account. Each paycheck will be printed on standard check stock with Client officer's signature and, if selected, Client's logo using the check data and account provided by Client; and

(ii) process file reversals, and request direct deposit reversals upon Client's written request;
(iii) notify Client of exceptions related to paychecks processing and pre-notification rejections, bank requested notification of change requests, and returned credits related to direct deposit services ("Exceptions");
(iv) notify Client of any errors or other circumstances in the event Ceridian is unable to provide payments and either re-performs Services (when possible) or arrange return of unpaid funds to Client. Unpaid Funds will be returned only after verification of available and sufficient fund balances (with time allowances for returned items) by the bank in which such funds are held; and
(v) monitor and interpret changes to those laws and regulations in the Territory pertaining to payroll gross-to-net calculations (including tax tables / tax rates), and modifying the Software and Services as required to incorporate such changes and ensure the Software performs all such calculations in compliance with the applicable laws and regulations.

6.2.2 Client's Obligations. Where Client elects to issue Payments using its own checks and / or drawn on its own bank account, Client will:
(i) enter, maintain and transmit (via the Software) Payroll data to Ceridian, such number of days as established by Ceridian (acting reasonably) prior to the date the paychecks are to be issued and deposits are to be made, as required to meet agreed upon processing schedules, as set forth in the Funding Authorization;
(ii) review and audit all Payroll data, reports and other materials prior to committing the Payroll. Client shall correct any discrepancies or errors in such materials prior to the next scheduled processing;
(iii) monitor changes to those laws specifically applicable to Client's business, interpreting applicable laws and regulations, determining the requirements for compliance with such laws and regulations, and notifying Ceridian of any changes to the Payroll processing required as a result of such laws;
(iv) correct Exceptions before transmitting Payroll data for Client's next Payroll (otherwise Client could be in breach of applicable laws or regulations);
(v) be responsible for contacting payees to resolve payment of any voided paychecks and reimburse Ceridian for any losses and fees incurred by Ceridian in circumstances where Ceridian honors Client's request to initiate a stop payment order and issues a replacement check, but the check originally issued is subsequently presented for payment by a holder in due course (including fraud or misconduct on the part of Employees);
(vi) require Employees to complete, sign and maintain any account funding authorizations or other documents or authorizations necessary for Ceridian to provide Services, including authorizations for the initiation of credit entries. Without limitation, Client shall ensure that each Employee utilizing Ceridian's direct deposit service has authorized the initiation of credit entries and the crediting of the Employee account, as well as the debiting of the Employee account through a file reversal in the event of a returned item from Client's account or any funding deficiency by Client (to extent permitted by law). Client must ensure that such authorizations are operative at the time of transmittal and crediting/debiting of the Employee accounts;
(vii) hereby grant to Ceridian the authority to issue Payments on behalf of Client, and to take such other action as may be necessary from time to time in connection with the provision of the Services, which might authorize to instruct its bank to stop payment and authorize to refuse payment as required to provide the Services;
(viii) pay for all reasonable expenses incurred by Ceridian as a result of Client errors or omissions;
(ix) ensure the Funds are available in the account from which Ceridian is drawing the Client Checks and/or initiating the Payments, and authorize the initiation of debit entries and the debiting of the account in the amount and on the date specified, and ensure that such authorization is operative at the time of transmittal of Client account; and
(x) provide Ceridian with Funds in an amount equal to the tax liability Payments to be made for a particular Payroll.

6.3 Tax Filing Services

6.3.1 Ceridian's Obligations. Ceridian will:
(i) prepare, deposit, and file Client's Payroll tax returns for those federal, state and local jurisdictions supported by Ceridian and reflected on Client's Tax jurisdictional profile;
(ii) provide Client with a regular tax statement for each Client tax registration number processed by Ceridian;
(iii) provide, prepare and file employer Tax Forms in the formats required by each Taxing Authority provided that Ceridian has provided tax filing Services for Client for the entire calendar year or Client has provided quarterly tax filing data in accordance with Section 6.3.2(vii);
(iv) respond to all Taxing Authorities inquiries pertaining to jurisdictions processed by Ceridian for periods of services provided by Ceridian. Ceridian shall provide Client with copies of correspondence sent to Taxing Authorities in the resolution of the inquiry;
(v) provide Client with online access to account information, including tax deposit history, status of inquiry and amendment processing and Client profile information; and
(vi) be liable for tax filing penalty and interest charges to the extent such charges were caused by Ceridian.

6.3.2 Client's Obligations. Client will:
(i) prior to the first Payroll date, provide Ceridian with such information, forms, Powers of Attorney, written authorizations and other documentation as reasonably required by Ceridian in order to enable Ceridian to determine paid and accrued taxes and tax liabilities, and to remit Client's tax liabilities and otherwise act on Client's behalf in this regard;
(ii) provide accurate account numbers, remittance frequency and all other information required from time to time to permit accurate and timely remittance by Ceridian;
(iii) notify Ceridian in writing immediately of any changes to the frequency with which it must make its statutory remittances, and provide Ceridian with any notices it receives from the Taxing Authorities relating to the frequency of such remittances or any other reporting requirements. Client shall continue to receive, review and be the contact for all correspondence and all other communications with the Taxing Authorities, but Client authorizes Ceridian to discuss matters relating to remittance of Client's source deductions with such Taxing Authorities;
(iv) communicate in writing any changes in services or changes that affect the information provided by Client to Ceridian ten (10) Business Days prior to the desired effective date of such change. Any penalty or other charges that result from incorrect, incomplete, or changed tax information provided by Client are Client's sole and exclusive liability and responsibility. Ceridian is not responsible for any matters existing prior to Ceridian's first Payroll date;
(v) review and compare the transmitted liabilities with Ceridian posted liabilities and notify Ceridian of any discrepancies within one (1) Business Day of initial receipt (or such other time period as reasonably established by Ceridian in accordance with its processing schedule);
(vi) enter, maintain and transmit (via the Software) Payroll data to Ceridian, such number of days as established by Ceridian (acting reasonably) prior to the date the paychecks are to be issued and deposits are to be made, as required to meet agreed upon processing schedules;
(vii) provide mid quarter data within two (2) weeks of the Service Start Date, or by the 15th day of March, June, September, or December, whichever comes first, if Client's Service Start Date is after tax liabilities have been paid by Client in the quarter of service (or by such other deadlines as reasonably established by Ceridian from time to time in accordance with its processing schedule);
(viii) assist Ceridian in responding to inquiries or in processing amendment requests by providing the information necessary to meet Tax Authority requirements. Client shall provide Ceridian with written approval for amendments or inquiries resulting in additional tax, penalty and/or interest due, and agrees to fund these amounts in full prior to completion and submission;

(ix) retain records according to the schedules established by Taxing Authorities for Client. Ceridian has no responsibility or liability for maintaining or retaining records on behalf of Client; and

(x) submit any necessary changes to the year end tax file in accordance with the time frames reasonably established by Ceridian (such time frames will be established based on the time required, after receipt of such information by Ceridian, for Ceridian to perform its responsibilities within the time prescribed by the Taxing Authorities).

6.4 Year End Employee Tax Forms

6.4.1 Ceridian's Obligations. Ceridian will:

(i) deliver the Tax Forms to Client no later than five (5) Business Days (or such other deadline as reasonably established by Ceridian from time to time in accordance with its processing schedule) after Client has committed/released to print (through the Software functionality) the Tax Forms in the year immediately following the calendar year for which the Tax Forms are being prepared (subject to Client's obligations to provide data and review output as contemplated herein, in a timely fashion);

(ii) provide support services via Ceridian's designated support portal for Client's technical personnel and primary users of the Service;

(iii) annually publish the Tax Forms production schedule;

(iv) print and/or post the type(s) and quantity of Tax Forms specified by Client and as the data appears in the file transmitted by Client; and

(v) package Tax Forms for shipment within five (5) Business Days (or such other deadline as reasonably established by Ceridian from time to time in accordance with its processing schedule) after Client has committed (through the Software application) to print/release the Tax Forms. Additional charges will apply for any Client requested (a) sorting and/or splitting, or (b) printing of Tax Forms.

6.4.2 Client's Obligations. Client will:

(i) review Tax Forms upon receipt of same and notify Ceridian of any errors in such materials within two (2) Business Days (or such other deadline as reasonably established by Ceridian from time to time in accordance with its processing schedule) of receipt of printed Tax Forms. Client agrees to reimburse Ceridian for all expenses incurred by Ceridian as a result of Client errors or omissions; and

(ii) adhere to the annually published Tax Forms production schedule provided by Ceridian including: (a) completion of any necessary adjustments in the timeframe designated by Ceridian; and (b) committing the Tax Forms to print.

6.5 Wage Attachment Disbursements

6.5.1 Ceridian's Obligations. Ceridian will:

(i) timely prepare and deposit Client's wage garnishment liabilities for those federal, state/provincial, and local payment processing units and individual third parties supported by Ceridian to which an Employee owes a debt and has agreed or is compelled by appropriate governmental authority to resolve via garnishment of Employee's wages;

(ii) collect funds to cover the total amount of wage garnishment liabilities transmitted by Client in accordance with the terms set forth in the Funding Authorization; and

(iii) provide a monthly statement of account activity to Client summarizing funds collection and disbursement transactions completed during the prior calendar month. Ceridian is not responsible for providing additional administrative services including agency research, account reconciliation, and wage garnishment data input and adjustments except where Ceridian has agreed in writing to provide such services.

6.5.2 Client's Obligations. Client will:

(i) provide wage garnishment data including wage order data, wage garnishment amounts, payee addresses, bank account information in a Ceridian approved format as outlined in user manuals, customer communications and service advisories within the timeframes as required in respect of the Payroll data generally;

(ii) provide funds to cover the total amount of wage garnishment liabilities transmitted by Client in accordance with the terms set forth in the Funding Authorization;

(iii) notify Ceridian of any unscheduled and/or special Payroll runs that will impact wage garnishment data including void, manual, and/or adjustment transactions;

(iv) correct any errors before transmitting Client's next Payroll or wage garnishment data transmission. Any penalty or other charges that result from incorrect, incomplete, and/or changed wage garnishment data received by Ceridian from Client, or from Client's changed information or signatures and documents in Client's possession that are not provided to Ceridian in a timely manner are Client's sole and exclusive responsibility; and

(v) compensate Ceridian for any applicable late or miscellaneous fees related to the services. Any penalty or other charges that result from incorrect, incomplete, and/or changed wage garnishment data received by Ceridian from Client, or from Client's changed information that it has not disclosed to Ceridian in a timely manner is Client's sole and exclusive responsibility.

7. ANCILLARY SERVICES. Ceridian makes available certain ancillary services for use in connection with the Services described above. Client may elect to use the following ancillary service at any time throughout the Service Term, at the then current Fee charged by Ceridian for such ancillary service (as set forth in the attached Pricing Schedule and/or Rate Sheet).

7.1 Insights Conference Discounted Annual Pass (the "Pass"). For each annual Pass Fee paid, Client will be entitled to send one representative to the annual Insights conference. This Fee covers admission to the conference and all sponsored events ordinarily included with such Fee (see Insights brochure for more details). Client will be responsible for all travel, accommodations and other expenses incurred. The first year's Fee will be invoiced upon signing this document and payable in accordance with the payment terms for Client's other Services. Client will automatically be renewed to attend the conference each year of the Service Term, for the Fee set forth in the Pricing Schedule (which Fee may be increased by Ceridian each year by written notice to the Client). The Pass will subsequently be billed each year of the Service Term one (1) year from the date of the original Pass invoice. If the Pass is cancelled sixty (60) days prior to the conference, a refund of the Pass Fee, minus a $150 administrative fee will be provided to the Client. If the Pass is cancelled within 59 days of the conference, a refund of fifty (50%) percent of the Pass Fee, minus a $150 administrative fee will be provided to the Client. Client acknowledges that the Pass is valid only for the year it is administered and cannot be used for subsequent years of the Service Term.

7.2 Employment and Salary Verification – Applicable only for Services and Employees in the United States. Ceridian will conduct employment, income and other employment status verification searches (at the then current rate, to be confirmed at time of ordering) for Client. Client will provide Ceridian with the required information in time for Ceridian to complete the Services in accordance with the mutually agreed upon processing schedule. As the data furnisher, Client shall be solely responsible for the accuracy of all data and information provided to Ceridian, and in this regard will participate (as needed) in consumer dispute resolution process that may occur related to the accuracy of information provided to Ceridian. The third party contractor through whom Ceridian provides this Service owns and operates The Work Number and is a Consumer Reporting Agency, as defined by the federal Fair Credit Reporting Act (FCRA). Information about applicable regulations currently in effect can be found at the Consumer Financial Protection Bureau's website: www.consumerfinance.gov/learnmore. The specific obligations of Furnishers of Information under the FCRA can be found at www.federalregister.gov/articles/2012/11/14/2012-27581/fair-credit-reporting-regulation-v-correction#h-14.

7.3 Unemployment Compensation – Applicable only for Services and Employees in the United States. Ceridian will become the "address of record" on behalf of Client to ensure the appropriate unemployment compensation forms are delivered on behalf of Client, and determine (in consultation with Client) whether or not unemployment claims should be protested and provide consultation on unemployment appeals and hearings. Ceridian will also verify unemployment rates and charges, protest invalid charges, verify annual unemployment tax rate assessment, calculate voluntary contributions when applicable and provide quarterly management reports. Client will deliver the required information in time for Ceridian to complete such services in accordance with the mutually agreed upon processing schedule, and will be solely responsible for the accuracy of all data and information furnished to Ceridian.

8. HARDWARE

8.1 Installation of Purchased or Rented Clocks from Ceridian

8.1.1 Ceridian's Obligations. Ceridian will:
(i) deliver hardware to Client in good working condition. Clocks will be shipped upon the initial project kick-off meeting, or for orders placed after project kick-off, immediately upon order placement;
(ii) make all corrections necessary to bring terminal(s) into compliance with the applicable specifications; and
(iii) provided Client is current on the mandatory maintenance fees for the clocks, provide maintenance services consisting of support, periodic updates to firmware, and updates to interfaces for the Software as required, as well as provide emergency replacement of terminal(s) that Ceridian stocks in the normal course of business. Emergency replacements will be shipped same Business Day if a return merchandise authorization (rma) is issued prior to 2:00 p.m. Eastern Time. If after 2:00 p.m. Eastern Time, shipment will be next Business Day. The maintenance fees are included in the base rental fee for rental clocks but are payable on an annual basis for purchased clocks. NEMA clock maintenance includes a return and repair policy rather than emergency replacement.

8.1.2 Client's Obligations. Client will:
(i) make available a suitable place of installation, adequate power and surge protection, and cabling. Client is responsible for location and mounting of the terminal(s) in compliance with accessibility laws and all building codes;
(ii) install and test terminal(s);
(iii) within fifteen (15) days of the receipt of terminal(s), notify Ceridian of any material Defect in terminal(s). If Client does not send written notice of the occurrence of a material Defect within such fifteen day time period, Client will be deemed to have accepted terminal(s);
(iv) Client must return any rented hardware within fifteen (15) days upon termination of this Service Exhibit. Clock rental fees will continue to accrue until all hardware has been returned;
(v) except for NEMA clocks which may not be returned, Client has the option to return rental or capital purchased hardware, within forty-five (45) days of receiving shipment, so long as the hardware is unopened and unused. Client is responsible for shipping costs of returned clocks. Any returns not meeting the above conditions are not eligible for a refund of fees paid;
(vi) if applicable, rental fees will begin to accrue immediately upon receipt of the rented clocks, and are required for a minimum period of twelve (12) months. Rental fees are applicable for the duration of time during which Client has the clocks in their possession. Rental fee accrual will not be terminated without an approved rma and will continue until Ceridian receives all clocks. If Client places the implementation on hold for any reason, clock rental fees will continue to apply; and
(vii) with the exception of NEMA clocks, if an emergency replacement of any terminal is required as part of the maintenance coverage, Client is obligated to return the original terminal(s) within fifteen (15) days of shipment of replacement. If Client does not return the original terminal(s) within this timeframe, Client will be charged full list price for the replacement terminal(s).

8.2 Ceridian Clock Warranty. Ceridian warrants that it has the right to sell terminal(s) to Client. Ceridian is not responsible or liable for damage, malfunction, or performance failures resulting from changes made to terminal(s) after acceptance or damage caused by the misuse, physical abuse, improper operation, the environment or other causes beyond Ceridian's exclusive control.

9. SERVICE FEES AND PAYMENT

9.1 Fees. The Fees payable by Client to Ceridian for the Services are as set forth in the attached Pricing Schedule. The Fees are exclusive of all Taxes. In addition to the Fees, Client shall reimburse Ceridian for all expenses (if any, in accordance with Ceridian's expense policy) incurred in connection with the implementation and provision of the Services, including travel, accommodation and meals. Except as otherwise stated herein, all invoices will be due and payable by direct deposit within thirty (30) days of the date of invoice.

9.2 One Time Fees

9.2.1 The One Time Fees for implementation Services have been calculated taking into account the work and materials Ceridian has reasonably estimated will be required to implement the Service. This estimate has been made by Ceridian in good faith based on the information available to Ceridian at the time of executing this Service Exhibit, including information and representations provided by Client. To the extent that new or additional information becomes available to Ceridian which impacts the estimated One Time Fees, the Parties shall mutually agree to necessary changes to the SOW (including to corresponding Fees).

9.2.2 Subject to any payment terms to the contrary in the SOW: (i) the One Time Fees for implementation (including any applicable conversion) Services will be invoiced and payable in two (2) installments as follows: (a) fifty percent (50%) at the date implementation Services are started (generally by way of a project kick off meeting) and (b) fifty percent (50%) at Service Start Date; (ii) all One Time Fees in respect of purchased or rented clocks, badges or other tangible items or hardware, will be invoiced upon shipment; (iii) all event-based One Time Fees will be payable upon event completion, and (iv) all other One Time Fees will be invoiced upon Service Start Date. However, Ceridian reserves the right to invoice and require payment of One Time Fees on a monthly basis (including for longer / more complex implementations), based on the amount of work completed each month.

9.3 Recurring Fees

9.3.1 The monthly Recurring Fees will be invoiced and payable monthly in advance, commencing as of the Service Start Date, based on the Number of Employees as at the 15th of each calendar month, or such other date as may be communicated to Client by Ceridian. Services included in the Pricing Schedule that are based on a per occurrence (e.g., Fees for ancillary services shown on the Rate Sheet), will be invoiced monthly in arrears. Any estimated annual Fees shown in the Pricing Schedule are estimates only, based on Client's Number of Employees and/or transaction count as at the date of signing this Service Exhibit. The annual Recurring Fees for additional non-production environments (if applicable) will be invoiced upon project kick-off and each anniversary thereof.

9.3.2 When and if made available by Ceridian, at Client's election, SMS text messaging for "Alerts and Notifications" functionality will be provided to Client at Ceridian's then current rate per message (both outbound and inbound messages shall be counted for the purposes of billing). Other miscellaneous charges may apply for mobile device access. Such Fees shall be billed based on the actual count for the previous month.

9.4 Staging Fees. Once Ceridian commences those implementation Services described in a written SOW and referenced in the Implementation Section herein, a Client instance of the Software is established for the purposes of configuration, user testing and implementation team training. In order to compensate Ceridian for the work required to establish and maintain such Client environment, commencing as of the initial project kick-off meeting through to the Service Start

Date (the "Staging Period"), Client shall pay Ceridian the Staging Fee listed in the Pricing Schedule (the "Staging Fee") in the amount and at the frequency shown therein. If the Staging Fee is shown as one single payment, it will be invoiced upon project kick-off and payable in accordance with the invoicing payment terms set forth herein. If the Staging Fee is shown in a quantity more than 1, such amount will be payable monthly during the Staging Period. For the avoidance of doubt, where the Staging Period is different (greater or lesser) than the stated quantity (which quantity is an estimate calculated by Ceridian in good faith based on the information available to Ceridian at the time of executing this Service Exhibit), Client will be invoiced for the actual number of months comprising the Staging Period.

9.5 Training Fees. All event-based training Fees will be payable upon event completion. Subscription-based training Fees will be payable upon project kick-off (or if subscribed after kick-off, immediately upon subscription) and each renewal date thereof.

9.6 Annual Fee Increase. All Fees are subject to annual increases in an amount not to exceed the annual increase in the Annual Inflation Index for the Territory (on a cumulative basis from the Service Start Date), the first such increase to be calculated and effective on the first anniversary of the Service Start Date.

9.7 Additional Miscellaneous Fees. In addition to the Fees payable as set forth in the attached Pricing Schedule, Client will be charged the miscellaneous Fees set forth in the attached Rate Sheet, when applicable. (If an item is listed on both the Pricing Schedule and the Rate Sheet, the lower rate in the Pricing Schedule shall govern.) Such Fees are intended to compensate Ceridian for additional work and/or disbursements payable to third parties as a result of the occurrence of such events and the Fees listed therein represent the Fees charged as of the date of this Service Exhibit. Ceridian reserves the right to change and/or expand the list of items on the Rate Sheet and/or the dollar amount of such items from time to time without notice to Client. An updated copy of the Rate Sheet will be available from Ceridian and provided upon Client's request.

10. SERVICE TERM AND TERMINATION

10.1 Service Term. Unless terminated earlier by a Party as a result of the other Party failing to perform one or more of its material obligations in the Agreement, the Services shall be effective and binding immediately upon execution hereof, and shall remain in effect for an initial Service Term equal to the number of months / years set forth above calculated from the Service Start Date, and thereafter shall automatically continue on the same terms without the need for any written extension agreement until terminated by either Party upon ninety (90) days' prior written notice to the other, or otherwise in accordance with the termination provisions in the Agreement.

10.2 Early Termination Fee. Client may only terminate the Services prior to the expiration of the initial Service Term upon payment of an early termination fee as described below, and by furnishing at least ninety (90) days' prior written notice to Ceridian. If Client terminates the Service pursuant to this Section, Client shall be responsible to pay to Ceridian, in addition to the Fees payable up to and including the effective date of termination of the Service (including all One Time Fees for work performed up to and including the date of termination), an early termination fee equal to the average monthly Recurring Fees (computed based on the Recurring Fees for Services provided to Client during the three (3) month period preceding cancellation, or the Services have not as yet commenced, then based on estimated annual fees as shown in the Pricing Schedule, pro rated for 3 months), multiplied by the number of whole or partial months between the date that the cancellation is effective and the expiration date of the initial Service Term, less a discount equal to 25%.

11. ADDITIONAL PROVISIONS

11.1 Client's Acknowledgement Regarding Trust Funds. Client acknowledges that Ceridian is entitled to invest monies held by the Trust in accordance with the investment guidelines established from time to time by Ceridian, and that Ceridian, in its own capacity, is entitled as income beneficiary to all income and gains derived or realized from such investments and is not accountable to Client, the Employees, or any other person for such income or gains. The Trust is entitled to pledge such investments for borrowings of the Trust to facilitate the Payments, rather than converting the investments into cash. Ceridian shall fully and completely indemnify and save Client and Client's Affiliates harmless from and against any and all loss of any portion of the principal amount of the Funds (including any losses of principal resulting from the investment of the Funds) caused by Ceridian, to the extent such Funds were actually received by Ceridian.

11.2 Verifying Compliance. Ceridian has the right to verify Client's compliance with the terms of this Service Exhibit (at Ceridian's own expense), at any time throughout the Service Term and for a period of one year thereafter, and Client shall maintain records relating to the Services hereunder for not less than such period. Ceridian will have the right, on its own behalf or through the use of a third party independent review firm, on not less than 30 days prior notice, to conduct an inspection of the relevant Client records during Client's normal business hours and in a manner that does not interfere unreasonably with Client's operations. In addition, Ceridian may require Client to complete a self-audit questionnaire relating to the Services, but in such case, Ceridian reserves the right to use the normal in person verification process as set out above. If Ceridian undertakes verification and does not find Material (as defined below) unauthorized use of the Services, Ceridian will not undertake another verification of Client for at least one year. Ceridian and its third party firms will use the information obtained in compliance verification only to enforce Ceridian's rights under the Agreement and to determine whether Client is in compliance with the terms of the Agreement. By invoking the rights and procedures described above, Ceridian does not waive its rights to enforce the Agreement or to protect its Intellectual Property by any other means permitted by law. As used herein in the context of payment of any Fees or other sums due, the term "Material" means a shortage of 5% or more. If a verification or self-audit reveals any underpayment of Fees (regardless of whether Material or not), Client will promptly pay to Ceridian the amount of such shortage, together with interest from the date such amounts should have been paid, at a rate equal to the prime lending rate then in effect with Ceridian's main financial institution, plus 5%. Additionally, if the shortage in Fees is found to be Material, in addition to the above amount, Client shall also reimburse Ceridian for all costs Ceridian has incurred in connection with the verification process.

11.3 Accuracy of Data. Client is solely responsible for the accuracy and completeness of all records and information furnished to Ceridian. In no event will Ceridian be responsible for any errors or matters existing prior to the Service Start Date, and any entries made by Client into the system thereafter, and Ceridian shall be entitled to rely solely on the information, authorizations, representations and warranties provided by Client pursuant to this Service Exhibit. Ceridian is not obligated to commence providing Services until receipt from Client of all information reasonably required to be received from Client to provide the Services. If Ceridian corrects any information or matters existing prior to the Service Start Date or performs any other service not expressly identified in this Service Exhibit, Client will pay Ceridian additional fees and charges computed on the basis of work performed by Ceridian, at Ceridian's then current hourly rate for such professional services.

11.4 Employee Information. Client shall be responsible for complying with all applicable laws associated with the collecting, processing, and tracking of employee Personal Information (including, without limitation, all applicable privacy laws), including with respect to geo-tracking and biometric information (if applicable). Client acknowledges and agrees that it is Client's responsibility to establish and maintain appropriate security and privacy procedures and policies, to properly inform its employees of the collecting, processing, and tracking of information, to obtain all necessary consents with respect thereto and to obtain all applicable government registrations. Ceridian shall not be responsible for Client's use of such information or the application, and Client shall indemnify and save Ceridian harmless from and against any and all reasonable and direct loss, damage or liability which Ceridian may incur arising from Client's use of the application (including, without limitation, invasion of privacy claims).

11.5 TeamRelate. The TeamRelate feature made available via the Software is intended to be used as one part of an overall candidate and employee assessment process and is not designed or recommended for standalone use or as a replacement for the professional judgment of Client's employees. If Client becomes dissatisfied with the TeamRelate feature, Client's sole remedy shall be to discontinue its use.

11.6 Extended Access to Historical Data. To the extent Client is migrating the Services described hereunder from an existing Ceridian hosted platform (the "Prior Ceridian System"), Ceridian agrees to provide access to Client's data stored in the Prior Ceridian System (the "Historical Data") for a period of twenty-

four (24) months following the Service Start Date (subject to any shorter retention period as required by applicable privacy or other laws). Access to the Historical Data will be provided at no charge during such 24 month period. Unless otherwise agreed between the Parties in writing, access will be terminated without further notice upon expiration of the noted period.

In consideration of the Fees to be paid hereunder, Client hereby requests that Ceridian provide those Services in accordance with the terms and conditions set forth in this Service Exhibit. This Service Exhibit may be executed either contemporaneously or subsequent to the Agreement, and in either case the terms of this Service Exhibit shall be deemed to be incorporated into and form an integral part of the Agreement. In the latter case where subsequently executed, the Agreement shall be considered amended by adding the provisions of this Service Exhibit, and to the extent this Service Exhibit does not modify the Agreement, the Agreement shall continue in full force and effect, unamended, and otherwise the execution of this Service Exhibit will not serve to revise the relationship between the Parties and any unremedied and outstanding accounts, breaches or other matters existing between the Parties as at the date this Service Exhibit is executed will remain intact and subsisting notwithstanding the amendment of the Agreement.

Ceridian HCM, Inc.

Per: **{{_es_signer2_signature}}**

Printed Name: {{_es_signer2_fullname}}

Title: {{_es_signer2_title}}

Date: {{_es_signer2_date}}

I have the authority to bind the corporation

Clatsop County Oregon

Per: **{{_es_signer_signature}}**

Printed Name: {{_es_signer_fullname}}

Title: {{_es_signer_title}}

Date: {{_es_signer_date}}

I have the authority to bind the corporation/partnership

CERIDIAN

STATEMENT OF WORK

CERIDIAN DAYFORCE HUMAN CAPITAL MANAGEMENT

CLIENT INFORMATION	
Client Name	
Clatsop County Oregon	the "Client"

This is the implementation Statement of Work ("SOW") as contemplated under the written Service Exhibit for Ceridian Dayforce Human Capital Management made between Ceridian and Client (the "HCM Exhibit"). This SOW sets forth the details for the implementation Services and/or deliverables (the "Implementation Services") to be provided in respect of those Services described in the HCM Exhibit (the "Services"). Capitalized terms not defined in this SOW shall have the meanings ascribed to them in the Service Agreement between Ceridian and Client.

Ceridian's obligation to deliver the Implementation Services set forth herein at the associated One Time Fees (detailed in the Pricing Schedule) will survive for twelve (12) months from project launch. Should the project exceed twelve (12) months for any reason not the fault of Ceridian, Ceridian reserves the right to revisit the scope and/or the One Time Fees associated with the Implementation Services.

1. Executive Summary

Client has engaged Ceridian to implement and provide education and training for the following bundled Subscribed Modules:

- Dayforce Core Elements
- Dayforce HR & Self-Service
- Dayforce Payroll
- Dayforce Time
- Advanced WFM Modules
  - Schedule Compliance
  - Projects
  - Shift Trading
- Dayforce Recruiting
- Dayforce Document Management

For the following population:

- 250 Employees at 1 location(s) in the United States.

2. Implementation Methodology

Ceridian determines the scope of work, timelines and Fees for Implementation Services on the basis that the Implementation Services will be delivered as one continuous project, and has scheduled resources based on this assumption. Any delays or phased roll out may impact the One Time Fees, and could result in a complete work stoppage until resources can be reassigned.

The tasks, duties, responsibilities, and deliverables to be provided by Ceridian to Client in connection with the Implementation Services will be provided utilizing the methodology described below. Note: activities within each stage may be adjusted to reflect project scope, and/or complexity. Not all activities apply to all projects. Adjustments, as may be required, will be identified during the Welcome stage.

(i) Welcome:

- Assign implementation team;
- Review/complete Getting Started questions;
- Establish project roles & responsibilities;
- Introduction to Dayforce Activate;
- Introduction to training;
- Access to instance;
- Complete Employee data load templates;
- Start data extraction process;
- Generate milestone schedule;
- Start organizational readiness planning.
- Provide access to instance in the sandbox environment. Included as standard are two (2) sandbox environments: (1) TEST (accessible by Ceridian and Client, generally used for solution refinement), and (2) CONFIG (accessible by Ceridian and Client, generally used for application configuration and to finalize the production environment).

(ii) Activate:

- Complete remaining templates through the Dayforce Activate wizard;
- Complete post-wizard checks and validations;
- Complete configuration of solution;
- Complete initial data mapping and data loads;
- Confirm outputs with Client for acceptance.

(iii) Refine:

- Conduct unit testing/QA of configured solution;
- Refine test results vs. needs, and confirm outputs with Client;
- Complete final data loads;
- Execution and confirmation of UAT, integration and parallel testing;
- Support parallel Payroll runs;
- Confirm all outputs with Client for acceptance.

(iv) Experience

- Support Client go-live preparedness activities;
- Prepare production environment;
- Support two (2) live production runs;
- Introduction to Support;
- Transition Client to Ceridian customer support team

3. Ceridian and Client Roles and Responsibilities

In order to facilitate the successful delivery of the Implementation Services, Client and Ceridian will ensure the appropriate individuals are assigned and available, as applicable, to fill the following roles with the associated responsibilities. Depending on project scope, not all projects will require all roles and/or responsibilities. Roles and responsibilities will be confirmed and agreed upon by both Parties during the Welcome stage.

Ceridian Role / Responsibilities		Client Role / Responsibilities	
Project Sponsor	[redacted]	Project Sponsor	[redacted]
Project Manager	[redacted]	Project Manager or Primary Resource	[redacted]
Onboarding Consultant	[redacted]	Client Power Users	[redacted]
Implementation Consultant(s)	[redacted] and resolution	Client Power Users	[redacted]
Dayforce Education	[redacted]	Client Trainer(s)	[redacted]

	[redacted]		

4. **Services, Responsibilities and Deliverables for Implementation of Subscribed Modules and Core Functionality**

(i) In Scope Work: Headings and details contained in this section reflect those components that are available with respect to the Subscribed Modules listed in the Executive Summary above. Ceridian will provide access to and implement those components indicated below as included.

Component	Description	Scope
	Dayforce Core Elements	
Organizational Hierarchy	[redacted]	Up to 50 Departments Included
Jobs and Positions	[redacted]	Included
Role Security	[redacted]	Up to 6 Roles Included
Pay Groups	[redacted]	Up to 5 Pay Groups Included
HR Administration Configuration	[redacted]	Included
Mobile Access	[redacted]	Included
Ad Hoc Reporting	[redacted]	Included
Message Center	[redacted]	Included
Web Services API	[redacted]	Included
	Dayforce HR & Self-Service	
Time Away From Work	[redacted]	Included
Earning Statements	[redacted]	Included
Administrator Self Service Forms	[redacted]	Included
Manager Self Service Forms	[redacted]	Included
Employee Self Service Forms	[redacted]	Included
Workflows	[redacted]	4 Standard Workflows Included

	[redacted]	
Guided Processes	[redacted]	Up to 3 Guided Processes Included
Entitlements	[redacted]	Up to 6 Entitlement Policies Included
TeamRelate	[redacted]	Included
Dayforce Onboarding		
Getting Started	[redacted]	Up to 2 versions of the Getting Started page Included
Onboarding Guided Processes	[redacted]	Up to 6 Onboarding Guided Processes Included
Onboarding Notifications	[redacted]	Included
Manager New Hire View	[redacted]	Included
Manager Checklists	[redacted]	Up to 2 versions of the Manager Checklist Included
Dayforce Payroll		
Payroll Preview	[redacted]	Included
Payroll Codes	[redacted]	Included
Legal Entities	[redacted]	Up to 2 Entity(ies) Included
Employer Bank Accounts	[redacted]	Up to 1 Account per Legal Entity Included
Ceridian Tax Filing	[redacted]s	Included
Ceridian Direct Deposit	[redacted]	Included
Ceridian Check	[redacted]	Included
Ceridian Wage Attachment Disbursements	[redacted]	Included
Deferred Compensation / RRSP and Pension Plans	[redacted]	Up to 2 Included
Workers Compensation	[redacted]	Included
3rd Party Payments	[redacted]	Included

General Ledger	[redacted]	Up to 1 General Ledger(s) Included
Year End	[redacted]	Included
Payroll Production Reports	[redacted]	Included
Payments to Non-Employees (Pensioners or Contractors)	[redacted]	Included
Dayforce Time		
Scheduling	[redacted]	Included
Pay Policies	[redacted]	Up to 16 Included
Punch Policies	[redacted]	Included
Employee System Access	[redacted]	Included
Advanced WFM Modules		
Labor Budgeting	[redacted]	Not Included
Task Management	[redacted]	Not Included
Advanced Scheduling	[redacted]	Not Included
Schedule Compliance	[redacted]	Included
Analytics	[redacted]	Not Included
Projects	[redacted]	Included

	[redacted]	
Attendance Tracking	[redacted]	Not Included
Shift Trading	[redacted]	Included
Labor Cost Now	[redacted]	Not Included
Dayforce Recruiting		
Recruiting Management	[redacted]	Included
Hiring Manager Self Service	[redacted]	Included
External Job Posting	[redacted]	Up to 10 external job boards Included
Recruiting Workflows	[redacted]	Included
Job Application Configuration	[redacted]	Up to 3 applications included
Notification Workflows	[redacted]	Included
Talent Community	[redacted]	Included
Client Careers Site	[redacted]	Included
Offer Management	[redacted]	Included
Background Screening Integration	[redacted]	Not Included
Jobvite Engage Configuration	[redacted]	Not Included
TeamRelate	[redacted]	Included
Dayforce Document Management		
Document Management - setup	[redacted]	Included
Document Management - configuration	[redacted]	Included (Manual assignment of security group for each employee is not included)
Company Documents	[redacted]	Included
Employee Documents	[redacted]	Manual upload of documents to each employee file by Client.
Tasks	[redacted]	Included
Self Service Forms	[redacted]	Included
Without limiting the generality of the agreement between the Parties, Client is solely responsible for ensuring retention of documents is in compliance with all applicable privacy laws.		
Dayforce Organizational Readiness		
Essentials	[redacted]	Included
Platform/Technical		
Client Verified Single Sign On	[redacted]	Not Included

Dayforce Language Packs	[redacted]	Not Included
Imports and Interfaces		
Interface Configuration	[redacted]	Following Interfaces are included 2- Deferred Compensation, Pension, 401K, RRSP Plans 1- Standard Imports required into Dayforce 1- Number of 3rd Party Exports required from Dayforce 1- Number of GL Exports required 0- Number of Benefit Carrier Exports required ESVS Integration
Current Year Active Employee Record Import	[redacted]	Included
Current Year Inactive & Current Year Terminated Employee Record Import	[redacted]	Included
Current Year Active & Current Year Inactive Employee Balance Import	[redacted]	Included
Current Year Active & Current Year Inactive Employee Earning & Deduction Elections Import	[redacted]	Included
Current Year Active, Current Year Inactive & Current Year Terminated Year-To-Date (YTD) Import	[redacted]	Included
Earning Statement for Current Year Active, Current Year Inactive & Current Year Terminated Employees Import	[redacted]	Current plus 3 calendar years included, if applicable
Current Year Active, Current Year Inactive & Current Year Terminated Employees HR History Import	[redacted]	Included, if applicable
Prior Year Terminated Employees Import	[redacted]	Included, if applicable
Non-Processing Payroll ID (PSID) Import	[redacted]	Included, if applicable
Current Year Benefit Elections for Current Year Active, Current Year Inactive & Current Year Terminated Employees Import	[redacted]	Included, if applicable
Current Year Active & Current Year Inactive Employee Child Support Import	[redacted]	Included, if applicable
Dayforce Education Services		
Dayforce Essentials	[redacted]	Included
Dayforce HCM Education Package (inclusive of 2 Live Membership and 1 MyPath subscriptions)	[redacted]	Included

(ii) Out of Scope Work: Unless a task, duty, responsibility or deliverable is expressly set forth under "(i) In Scope Work" above, it is out of scope and will not be provided or performed by Ceridian as part of the implementation Fees quoted. Without limiting the generality of this principle, Ceridian and Client expressly confirm that the following specific items are out of scope:

- Integration to 3rd party systems other than those identified in the HCM Exhibit;
- Training material development outside of the Education Services specified above;
- Client resource and/or third party vendor management.

5. Assumptions and Client Duties and Responsibilities

In addition to the assumptions and requirements set forth above, Client acknowledges and agrees that the One Time Fees and estimated timelines are based on the following assumptions:

- Client will accurately complete all questionnaires, templates, and requests for data;
- Client will provide access to Client's current systems, data storage environment, and personnel with the appropriate knowledge of Client's systems and its configuration, to assist in data analysis for HR data import, exports and configuration;
- While both Ceridian and Client may have a project manager, Client is responsible for overall project and resource management. Lack of access to Client resources or changes to any individuals filling the roles identified above may impact project timeline and costs;
- Client will provide solution feedback through the iterative "OK to Proceed" process, and will work with resources assigned to achieve an "OK to Proceed" in a reasonable time frame per the project schedule.
- Client will provide data requested by project team in a timely manner;
- Client will staff the above-noted roles to provide requirements and feedback in a timely manner;
- Client Power User will be appointed during project launch and must be available for the duration of the project;
- Client will confirm acceptance for all Implementation Services (including UAT) in a timely fashion and per the project schedule;
- Any changes to scope described above will require a Change Request;
- Client will complete training requirements within the designated timeframe;
- Client will follow the instructions contained in the training materials;
- The CONFIG environment (including all data) will be decommissioned after a period of thirty (30) days from the Service Start Date. The TEST environment will remain active for the duration of the Service Term;
- Additional non-production environments may be provided by Ceridian for Client's use, subject to additional costs.

In consideration of the Fees to be paid hereunder, Client hereby requests that Ceridian provide those Implementation Services in accordance with the terms and conditions set forth in this SOW. This SOW may be executed either contemporaneously or subsequent to the Agreement, and in either case the terms of this SOW shall be deemed to be incorporated into and form an integral part of the Agreement. In the latter case where subsequently executed, the Agreement shall be considered amended by adding the provisions of this SOW, and to the extent this SOW does not modify the Agreement, the Agreement shall continue in full force and effect, unamended, and otherwise the execution of this SOW will not serve to revise the relationship between the Parties and any unremedied and outstanding accounts, breaches or other matters existing between the Parties as at the date this SOW is executed will remain intact and subsisting notwithstanding the amendment of the Agreement.

Ceridian HCM, Inc.	**Clatsop County Oregon**
Per: **{{_es_signer2_signature}}**	Per: **{{_es_signer_signature}}**
Printed Name: {{_es_signer2_fullname}}	Printed Name: {{_es_signer_fullname}}
Title: {{_es_signer2_title}}	Title: {{_es_signer_title}}
Date: {{_es_signer2_date}}	Date: {{_es_signer_date}}
I have the authority to bind the corporation	I have the authority to bind the corporation/partnership

CERIDIAN

PRICING SCHEDULE - Ceridian US Price List
November 8, 2016

Currency: USD

This confidential Pricing Schedule has been prepared exclusively for Clatsop County Oregon by David Slavick

Purchased Bundle: Dayforce Pay and Time

Estimated Implementation and One-Time Fees	Frequency	Product Type	Unit Of Measure	Unit Price	Quantity	Price
Dayforce Pay and Time	[redacted]	[redacted]	[redacted]	[redacted]	[redacted]	$38,480.00

Estimated Staging Fees	Frequency	Product Type	Unit Of Measure	Unit Price	Quantity	Price
Dayforce Staging Fee	[redacted]	[redacted]	[redacted]	[redacted]	[redacted]	$5,005.00

Estimated Recurring Fees	Frequency	Product Type	Unit Of Measure	Unit Price	Quantity	Price
Dayforce HCM Subscription Fee*	[redacted]	[redacted]	[redacted]	[redacted]	[redacted]	$4,812.50
Dayforce HCM Education Package	[redacted]	[redacted]	[redacted]	[redacted]	[redacted]	$2,750.00

Summary of Estimated Annual Totals	Total
Total Estimated One Time Fees	**$43,485.00**
Total Estimated Recurring Fees	**$60,500.00**

Additional Pricing Schedule Terms
**Included in the Dayforce HCM Subscription Fee:*
- *Dayforce Core Elements*
- *Dayforce HR & Self Service*
- *Dayforce Payroll*
- *Dayforce Time*
- *WFM Projects Module*
- *WFM Shift Trading*
- *Dayforce Recruiting*
- *Dayforce Document Management (up to 250MB per EE)*
- *Dayforce Employment/Salary Verification Service*

This Pricing Schedule represents all Services to be delivered by Ceridian to Client as of the Service Start Date and supersedes pricing in respect of any and all Services contemplated under any prior agreement entered into between the Parties.

For the purposes of this Pricing Schedule, the Service Start Date shall be the date on which Client has access to all of the Subscribed Modules and/or Services referenced above and all of the following specific Subscribed Modules have been configured for use by Client:
- *Dayforce Core Elements*
- *Dayforce HR & Self Service*
- *Dayforce Payroll*
- *Dayforce Time*

The Subscription Fee includes one (1) Federal, State, and Local Tax Filing ID
Each additional Federal Tax Filing ID will be charged at a price of $55.00
Each additional State Tax Filing ID will be charged at a price of $10.00
Each additional Local Tax Filing ID will be charged at a price of $10.00

Prices shown herein are valid only if signed by Client within 30 days from the date above
Prices are exclusive of all Taxes
Goods and/or materials, if any, shipped FOB Origination Point

Ceridian HCM, Inc.

Per: {{_es_signer2_signature}}

Printed Name: {{_es_signer2_fullname}}

Title: {{_es_signer2_title}}

Date: {{_es_signer2_date}}

I have the authority to bind the corporation

Clatsop County Oregon

Per: {{_es_signer_signature}}

Printed Name: {{_es_signer_fullname}}

Title: {{_es_signer_title}}

Date: {{_es_signer_date}}

I have the authority to bind the corporation/partnership

CERIDIAN

[redacted]

[redacted]

[redacted]

[redacted]

[redacted]

[redacted]

Board of Commissioners
Clatsop County

AGENDA ITEM SUMMARY

December 14, 2016

Issue/Agenda Title: Janitorial Services Contract

Category: Consent Calendar

Prepared By: David Dieffenbach

Presented By: David Dieffenbach

Issue before the Commission: Approval of Custodial Services contract with NW Facility Solutions, to provide custodial cleaning services for the remainder of the 2016-17 fiscal year and the 2017-18 fiscal year.

Informational Summary: The contract for custodial cleaning services has been with ABM Janitorial since September of 2012. This contract had been amended several times to extend the date and cost, per approval by the Board in 2013. The county and ABM Janitorial was unable to reach an agreement this fiscal year, thus the contract expired at the end of October 2016.

The county contracted with NW Facility Solutions to provide custodial services starting November 1, 2016; this is a short term contract. The County and State contracting rules allow direct appoint for Personal Services contracts under $10,000. NW Facility Solutions was able to hire the same staff that ABM was using; this allowed the same staff to continue to work in our buildings and stay employed in our county.

The County issued a new RFQ (Request for Quotes) on November 16th, to hire a long term custodial services contractor. We are following the State and Local Contracting Board Rules, for Intermediate Procurement that allows contracts up to $150,000.

The County posted the RFQ on the County Web site and sent notice of the RFQ to three custodial contractors. We had two contractors come to a non-mandatory walk-thru on November 21, 2016. We received three quotes by the response date of November 29, 2016. Upon review of the quotes staff is recommending completing a contract with NW Facility Solutions.

The contractor will provide custodial cleaning services to the Public Services Buildings (800 & 820 Exchange), Jail Building and the Animal Shelter. We use county staff to clean the Courthouse and the Boyington buildings.

Fiscal Impact: The proposed cost is within the budgeted amounts for custodial services for this fiscal year. The cost for the remainder of the 2016-17 fiscal year is $43,388 for regular services, plus an additional $6,500 for optional extra services.

The cost for 2017-18 fiscal year will be $81,702 including a 2% increase, plus an additional $9,000 for optional extra services. The extra services include carpet cleaning, window cleaning and any other cleaning type services we may direct the contractor to perform.

Options to Consider:

1. Approval of a Personal Services contract with NW Facility Solutions, to perform Custodial Services for the remainder of this fiscal year and all of the next fiscal year.
2. Direct staff to attempt to get additional quotes.
3. Reject all quotes and direct staff to conduct another solicitation.

Staff Recommendation: Option #1

Recommended Motion: *"I move to authorize the County Manager to sign the contract with NW Facility Solutions to provide Custodial Services for the reminder of the 2016-17 fiscal year and the 2017-18 fiscal year for a not to exceed amount of $140,702; and to authorize the County Manager to sign any amendments"*

Attachment List:

A. Cost summary.

Attachment A.

Custodian Cost

	NW Facility Solutions			
Buildings	Monthly 16-17	Annual 16-17	Monthly 17-18	Annual 17-18
800 Exchange	2,100.00	25,200.00	2,142.00	25,704.00
820 Exchange	2,500.00	30,000.00	2,550.00	30,600.00
Jail	600.00	7,200.00	612.00	7,344.00
Sheriff's Office	875.00	10,500.00	892.50	10,710.00
Animal Shelter	600.00	7,200.00	612.00	7,344.00
Total	6,675.00	80,100.00	6,808.50	81,702.00
6.5 months (16-17)		43,387.50		
Extra Services		6,500.00		9,000.00
Cost 2016-17		49,887.50		
Cost 2017-18				**90,702.00**
Grand Total				**140,702.00**
Carpet Per SF	0.15			
Hourly Rate	25.00			
% Increase 17-18	2.00			

CLATSOP COUNTY, OREGON
1100 Olney Ave.
Astoria, Oregon 97103
An Equal Opportunity Employer

Contract No. C6158__

PERSONAL/PROFESSIONAL SERVICES AGREEMENT

This AGREEMENT is by and between Clatsop County ("County") and **NW Facility Solutions, LLC** ("Contractor"). Whereas County has need of the services which Contractor has agreed to provide; NOW THEREFORE, in consideration of the sum not to exceed $140,702 to be paid to Contractor by County, Contractor agrees to perform between date of execution and June 30, 2018, inclusive, the following specific personal and/or professional services:

Provide Custodial Services at 800 & 820 Exchange, Jail building and the Animal Shelter. Per the attached, RFQ Document "Exhibit A."

Payment Terms: *(monthly installments, Exhibit B if appropriate): Custodian Cost Spread Sheet.*

1. **COMPLETE AGREEMENT**. This Agreement contains the entire understanding of the parties and supersedes all prior agreements, oral or written, and all other communication between the parties relating to the subject matter of this Agreement.
2. **WRITTEN NOTICE.** Any notice of termination or other communication having a material effect on this Agreement shall be served by U.S. Mail on the signatories listed.
3. **GOVERNING LAW/VENUE.** This Agreement shall be governed by the laws of the State of Oregon. Any action commenced in connection with this Agreement shall be in the Circuit Court of Clatsop County. The prevailing party shall be entitled to reasonable attorney fees and costs, including an appeal. All rights and remedies of County shall be cumulative and may be exercised successively or concurrently. The foregoing is without limitation to or waiver of any other rights or remedies of County according to law.
4. **COMPLIANCE.** Contractor shall comply with all applicable Federal, State, and local laws, rules and regulations. All provisions of ORS 279B.220-235 (Public Contracts and Purchasing) are incorporated herein to the extent applicable to personal/professional service agreements. Specifically, Contractor shall:
   a. Promptly pay, as due, all persons supplying labor and material for the prosecution of the work provided of in such contract. If Contractor fails to pay any such claim, County may pay the claim and charge the payment against the funds due Contractor, pursuant to ORS 279B.220;
   b. Pay any required contributions due the Industrial Accident Fund incurred in the performance of the contract;
   c. Not permit any lien or claim to be filed or prosecuted against County, on account of any labor or material furnished by Contractor;
   d. Pay the Department of Revenue all sums withheld from employees pursuant to ORS 316.167;.
   e. Not employ any person more than 10 hours a day, or 40 hours a week, unless permitted under ORS 279B.235, and any employee working over 40 hours per week shall be paid overtime as provided in ORS 279B.235.
   f. Pay promptly, as due, any payment for medical surgical or hospital care furnished to employees of Contractor, pursuant to ORS 279B.230.

g. If Contractor is a subject employer, Contractor will comply with ORS 656.017.

5. **JUDICIAL RULINGS**. If any provision of this-as applied to either party or to any circumstances shall be adjudged by a court to be void or unenforceable, the same shall in no way affect any other provision of this Agreement or the validity of enforceability of the Agreement.

6. **INDEPENDENT CONTRACTOR**. Contractor, in carrying out the services to be provided under this Agreement, is acting as an "independent contractor" and is not an employee of County, and as such accepts full responsibility for taxes or other obligations associated with payment for services under this Agreement. As an "independent contractor", Contractor will not receive any benefits normally accruing to County employees unless required by applicable law. Furthermore, Contractor is free to contract with other parties, on other matters, for the duration of this Agreement.

7. **INDEMNIFICATION**. Contractor shall save harmless, indemnify, and defend County for any and all claims, damages, losses and expenses including but not limited to reasonable attorney's fees arising out of or resulting from Contractor's performance of or failure to perform the obligations of this Agreement to the extent same are caused by the negligence or misconduct of Contractor or its employees or agents.

8. **INSURANCE**. Contractor shall purchase and maintain at Contractor's expense, Comprehensive General Liability, Automobile Liability, and Professional Liability insurance. This insurance is to provide separate coverage for each of the required types of insurance at a minimum of $600,000 for property damage and minimum of $700,000 per person for bodily injury and no less than $1,400,000 for each occurrence. In addition, all such insurance, with the exception of Professional Liability, shall name County, its Commissioners, employees and agents, as an **Additional Insured**. A copy of the policy or certificate of insurance acceptable to County shall be submitted to County. Some, or all, of the required insurance may be waived or modified if approved by County's counsel as follows:

_____

_____(approved by County Counsel)_____(Contractor's Initials)_____

9. **WORKER'S COMPENSATION**. Contractor shall comply with ORS 656.017 for all employees who work in the State of Oregon. If Contractor hires employees, he or she shall provide County with certification of Worker's Compensation Insurance, with employer's liability in the minimum of $100,000.

10. **NONDISCRIMINATION**. No person shall be subjected to discrimination in receipt of the benefits of any services or activities made possible by or resulting from this Agreement on the grounds of sex, race, color, creed, marital status, age or national origin. Any violation of this provision shall be considered a material violation of this Agreement and shall be grounds for cancellation, termination or suspension in whole or in part by County.

11. **TERMINATION OF AGREEMENT**. This Agreement may be terminated under the following conditions:

a. By written mutual agreement of both parties. Termination under this provision may be immediate.

b. Upon fifteen (15) calendar days written notice by either Party to the other of intent to terminate.

c. Immediately on breach of the contract.

12. **SUBCONTRACTING/NONASSIGNMENT**. No portion of this Agreement may be contracted to assigned to any other individual, firm, or entity without the express and prior approval of County.

13. **SURVIVAL**. The terms, conditions, representations and all warranties contained in this Agreement shall survive the termination or expiration of this Agreement.

14. **FUNDING**. In the event the Board of Commissioners of County reduces, changes, eliminates, or otherwise modifies the funding for any of the services identified, Contractor agrees to abide by any such decision including termination of service.

15. **STANDARD OF SERVICES AND WARRANTY**. Contractor agrees to perform its services with that standard of care, skill and diligence normally provided by a professional individual in the performance of similar services. It is understood that Contractor must perform the services based in part on information furnished by County and that Contractor shall be entitled to rely on such information. However, Contractor is given notice that County will be relying on the accuracy, competence and completeness of Contractor's services in utilizing the results of such services. Contractor warrants that the recommendations, guidance and performance of any person assigned under this Agreement shall be in accordance with professional standards and the requirements of this Agreement.

16. COUNTY PRIORITIES. Contractor shall comply promptly with any requests by County relating to the emphasis or relative emphasis to be placed on various aspects of the work or to such other matters pertaining to said work.

17. OWNERSHIP AND USE OF DOCUMENTS. All documents, or other material submitted to County by Contractor shall become the sole and exclusive property of County. All material prepared by Contractor under this Agreement may be subject to Oregon's Public Records Laws.

18. TAX COMPLIANCE CERTIFICATION. Contractor hereby certifies, under penalty of perjury, as provided in ORS 305.385(6), that to the best of Contractor's knowledge, Contractor is not in violation of any of the tax laws of this state or political subdivision of this state, including but not limited to ORS 305.380(4), 305.620 and ORS chapters 316, 317 and 318. Contractor represents that Contract will continue to comply with the tax laws of this state and any applicable political subdivision of this state during the term of the public contract. If Contractor's fails to comply with the tax laws of this state or a political subdivision of this during the term of this agreement, the Contractor shall be in default and County may terminate this agreement and pursue its remedies under the agreement and under applicable law.

This Agreement will not be effective until approved by the authorized signatory for County.

FOR COUNTY:

_____

Signature Date

_____

Title

FOR CONTRACTOR:

_____

Signature Date

_____

Title

_____

Address

_____

City State Zip

Board of Commissioners
Clatsop County

AGENDA ITEM SUMMARY

December 14, 2016

Issue/Agenda Title: Contract for 2016-17 Emergency Management Program Grant (EMPG)

Category: Consent Calendar

Prepared By: Tiffany Brown, Emergency Manager

Presented By: Tiffany Brown

Issue before the Commission: Approve the grant award conditions and certifications and authorize the County Manager to sign and execute.

Informational Summary: The Clatsop County Emergency Management Division (CCEMD) has received matching funds from Oregon Emergency Management (OEM), which are pass-through monies from FEMA's Emergency Management Performance Grant (EMPG). The grant funding are used to offset the personnel costs of a full-time Emergency Manager, two part-time Emergency Coordinators and Information Services support, and it requires the county to perform certain functions and meet various goals, which the program has been successful in completing the last eleven years. The grant also requires quarterly reports that detail the work performed and the goals met by the program.

Fiscal Impact: This grant will provide up to $67,633.00 for the federal fiscal year 2016-17. Maximum reimbursement is set at 50% of program cost. This grant money was allocated in the FY2016-17 Adopted Budget.

Options to Consider:

1. The Board could approve the grant amendment and authorize the County Manager to execute.
2. The Board could choose not to approve the grant, and identify alternate funding.

Staff Recommendation: Option #1

Recommended Motion: *"I move that we approve the 2016-17 EMPG Award agreement and authorize the Chair to sign."*

Attachment List:

A. Contract #6134

OREGON MILITARY DEPARTMENT
OFFICE OF EMERGENCY MANAGEMENT
EMERGENCY MANAGEMENT PERFORMANCE GRANT
CFDA # 97.042
CLATSOP COUNTY
$72,752
Grant No: 16-504

This Agreement is made and entered into by and between the **State of Oregon,** acting by and through the Oregon Military Department, Office of Emergency Management, hereinafter referred to as "OEM," and **Clatsop County,** hereinafter referred to as "Subrecipient," and collectively referred to as the "Parties."

1. **Effective Date.** This Agreement shall become effective on the date this Agreement is fully executed and approved as required by applicable law. Reimbursements will be made for Project Costs incurred beginning on **July 1, 2016** and ending, unless otherwise terminated or extended, on **June 30, 2017** (Expiration Date). No Grant Funds are available for expenditures after the Expiration Date. OEM's obligation to disburse Grant Funds under this Agreement shall end as provided in Section 5.b.iv of this Agreement.

2. **Agreement Documents.** This Agreement consists of this document and the following documents, all of which are attached hereto and incorporated herein by reference:

   Exhibit A: **Project Description and Budget**
   Exhibit B: **Federal Requirements and Certifications**
   Exhibit C: **Subcontractor Insurance**
   Exhibit D: **Information required by 2 CFR 200.331(a)**

   In the event of a conflict between two or more of the documents comprising this Agreement, the language in the document with the highest precedence shall control. The precedence of each of the documents comprising this Agreement is as follows, listed from highest precedence to lowest precedence: Exhibit B; this Agreement without Exhibits; Exhibit A; Exhibit C.

3. **Grant Funds; Matching Funds.** In accordance with the terms and conditions of this Agreement, OEM shall provide Subrecipient an amount not to exceed **$72,752** in Grant Funds for eligible costs described in Section 6 hereof. Grant Funds for this Program will be from the Fiscal Year 2016 Emergency Management Performance Grant (EMPG) Program. Subrecipient shall provide matching funds for all Project Costs as described in Exhibit A.

4. **Project.** The Grant Funds shall be used solely for the Project described in Exhibit A and shall not be used for any other purpose. No Grant Funds will be disbursed for any changes to the Project unless such changes are approved by OEM by amendment pursuant to Section 11.d hereof.

5. **Reports.** Failure of Subrecipient to submit the required program, financial, or audit reports, or to resolve program, financial, or audit issues may result in the suspension of grant payments, termination of this Agreement, or both.

a. **Performance Reports.**

i. Subrecipient agrees to submit performance reports, using a form provided by OEM, on its progress in meeting each of its agreed upon goals and objectives. The narrative reports will address specific information regarding the activities carried out under the FY 2016 Emergency Management Performance Grant Program and how they address identified work plan elements.

ii. Reports are due to OEM on or before the 15th day of the month following each subsequent calendar quarter (ending on March 31, June 30, September 30, and December 31).

iii. Subrecipient may request from OEM prior written approval to extend a performance report requirement past its due date. OEM, in its sole discretion, may approve or reject the request.

b. **Financial Reimbursement Reports.**

i. To receive reimbursement, Subrecipient must submit a signed Request for Reimbursement (RFR), using a form provided by OEM, that includes supporting documentation for all grant and, if applicable, match expenditures. RFRs may be submitted monthly but no less frequently than quarterly during the term of this Agreement. At a minimum, RFRs must be submitted on or before 30 days following each subsequent calendar quarter (ending on March 31, June 30, September 30, and December 31), and a final RFR must be submitted no later than 30 days following the end of the grant period.

ii. Reimbursements for expenses will be withheld if performance reports are not submitted by the specified dates or are incomplete.

iii. Reimbursement rates for travel expenses shall not exceed those allowed by the State of Oregon. Requests for reimbursement for travel must be supported with a detailed statement identifying the person who traveled, the purpose of the travel, the dates, times, and places of travel, and the actual expenses or authorized rates incurred.

iv. Reimbursements will only be made for actual expenses incurred during the Grant Award Period provided in Section 1. Subrecipient agrees that no grant or, if applicable, match funds may be used for expenses incurred before or after the Grant Award Period.

6. **Disbursement and Recovery of Grant Funds.**

a. **Disbursement Generally.** OEM shall reimburse eligible costs incurred in carrying out the Project, up to the Grant Fund amount provided in Section 3. Reimbursements shall be made by OEM upon approval by OEM of an RFR. Eligible costs are the reasonable and necessary costs incurred by Subrecipient for the Project, in accordance with the Emergency Management Performance Grants guidance and application materials, including without limitation the United States Department of Homeland Security Notice of Funding Opportunity Announcement (NOFO), that are not excluded from reimbursement by OEM, either by this Agreement or by exclusion as a result of financial review or audit. The guidance, application materials and NOFO are available at http://www.oregon.gov/OMD/OEM/Pages/plans_train/EMPG.aspx#Emergency_Management_Performance_Grants_(EMPG)_Program

b. **Conditions Precedent to Disbursement.** OEM's obligation to disburse Grant Funds to Subrecipient is subject to satisfaction, with respect to each disbursement, of each of the following conditions precedent:

i. OEM has received funding, appropriations, limitations, allotments or other expenditure authority sufficient to allow OEM, in the exercise of its reasonable administrative discretion, to make the disbursement.

ii. Subrecipient is in compliance with the terms of this Agreement including, without limitation, Exhibit B and the requirements incorporated by reference in Exhibit B.

iii. Subrecipient's representations and warranties set forth in Section 7 hereof are true and correct on the date of disbursement with the same effect as though made on the date of disbursement.

iv. Subrecipient has provided to OEM a RFR in accordance with Section 5.b of this Agreement.

c. **Recovery of Grant Funds.** Any funds disbursed to Subrecipient under this Agreement that are expended in violation or contravention of one or more of the provisions of this Agreement ("Misexpended Funds") or that remain unexpended on the earlier of termination or expiration of this Agreement ("Unexpended Funds") must be returned to OEM. Subrecipient shall return all Misexpended Funds to OEM promptly after OEM's written demand and no later than 15 days after OEM's written demand. Subrecipient shall return all Unexpended Funds to OEM within 14 days after the earlier of expiration or termination of this Agreement.

7. **Representations and Warranties of Subrecipient.** Subrecipient represents and warrants to OEM as follows:

a. **Organization and Authority.** Subrecipient is a political subdivision of the State of Oregon and is eligible to receive the Grant Funds. Subrecipient has full power, authority, and legal right to make this Agreement and to incur and perform its obligations hereunder, and the making and performance by Subrecipient of this Agreement (1) have been duly authorized by all necessary action of Subrecipient and (2) do not and will not violate any provision of any applicable law, rule, regulation, or order of any court, regulatory commission, board, or other administrative agency, (3) do not and will not result in the breach of, or constitute a default or require any consent under any other agreement or instrument to which Subrecipient is a party or by which Subrecipient or any of its properties may be bound or affected. No authorization, consent, license, approval of, filing or registration with or notification to any governmental body or regulatory or supervisory authority is required for the execution, delivery or performance by Subrecipient of this Agreement.

b. **Binding Obligation.** This Agreement has been duly executed and delivered by Subrecipient and constitutes a legal, valid and binding obligation of Subrecipient, enforceable in accordance with its terms subject to the laws of bankruptcy, insolvency, or other similar laws affecting the enforcement of creditors' rights generally.

c. **No Solicitation.** Subrecipient's officers, employees, and agents shall neither solicit nor accept gratuities, favors, or any item of monetary value from contractors, potential contractors, or parties to subagreements. No member or delegate to the Congress of the United States or State of Oregon employee shall be admitted to any share or part of this Agreement or any benefit arising therefrom.

d. **NIMS Compliance.** By accepting FY 2016 funds, Subrecipient certifies that it has met National Incident Management System (NIMS) compliance activities outlined in the Oregon NIMS Requirements located through the OEM at http://www.oregon.gov/OMD/OEM/Pages/plans_train/NIMS.aspx#Oregon_NIMS_Requirements.

The warranties set forth in this section are in addition to, and not in lieu of, any other warranties set forth in this Agreement or implied by law.

8. **Records Maintenance and Access; Audit.**

a. **Records, Access to Records and Facilities.** Subrecipient shall make and retain proper and complete books of record and account and maintain all fiscal records related to this Agreement and the Project in accordance with all applicable generally accepted accounting principles, generally accepted governmental auditing standards and state minimum standards for audits of municipal corporations. Subrecipient acknowledges and agrees, and Subrecipient will require its contractors, subcontractors, sub-recipients (collectively hereafter "contractors"), successors, transferees, and assignees to acknowledge and agree, to provide OEM, Oregon Secretary of State (Secretary), Office of Inspector General (OIG), Department of Homeland Security (DHS), Federal Emergency Management Agency (FEMA), or any of their authorized representatives, access to records, accounts, documents, information, facilities, and staff. Subrecipient and its contractors must cooperate with any compliance review or complaint investigation by any of the above listed agencies, providing them access to and the right to examine and copy records, accounts, and other documents and sources of information related to the grant and permit access to facilities, personnel, and other individuals and information as may be necessary. The right of access is not limited to the required retention period but shall last as long as the records are retained.

b. **Retention of Records.** Subrecipient shall retain and keep accessible all books, documents, papers, and records that are directly related to this Agreement, the Grant Funds or the Project for until the latest of (a) six years following termination, completion or expiration of this Agreement, (b) upon resolution of any litigation or other disputes related to this Agreement, or (c) as required by 2 CFR 200.333. It is the responsibility of Subrecipient to obtain a copy of 2 CFR Part 200, and to apprise itself of all rules and regulations set forth.

c. **Audits.**

i. If Subrecipient expends $750,000 or more in Federal funds (from all sources) in its fiscal year, Subrecipient shall have a single organization-wide audit conducted in accordance with the provisions of 2 CFR 200 Subpart F. Copies of all audits must be submitted to OEM within 30 days of completion. If Subrecipient expends less than $750,000 in its fiscal year in Federal funds, Subrecipient is exempt from Federal audit requirements for that year. Records must be available for review or audit by appropriate officials as provided in Section 8.a. herein.

ii. Audit costs for audits not required in accordance with 2 CFR 200 Subpart F are unallowable. If Subrecipient did not expend $750,000 or more in Federal funds in its fiscal year, but contracted with a certified public accountant to perform an audit, costs for performance of that audit shall not be charged to the grant.

iii. Subrecipient shall save, protect and hold harmless the OEM from the cost of any audits or special investigations performed by the Secretary or any federal agency with respect to the funds expended under this Agreement. Subrecipient acknowledges and agrees that any audit costs incurred by Subrecipient as a result of allegations of fraud, waste or abuse are ineligible for reimbursement under this or any other agreement between Subrecipient and the State of Oregon.

9. **Subrecipient Procurements; Property and Equipment Management and Records; Subcontractor Indemnity and Insurance**

a. **Subagreements.** Subrecipient may enter into agreements (hereafter "subagreements") for performance of the Project. Subrecipient shall use its own procurement procedures and regulations, provided that the procurement conforms to applicable Federal and State law

(including without limitation ORS chapters 279A, 279B, 279C, and that for contracts for more than $150,000, the contract shall address administrative, contractual or legal remedies for violation or breach of contract terms and provide for sanctions and penalties as appropriate, and for contracts for more than $10,000 address termination for cause or for convenience including the manner in which termination will be effected and the basis for settlement).

i. Subrecipient shall provide to OEM copies of all Requests for Proposals or other solicitations for procurements anticipated to be for $100,000 or more and to provide to OEM, upon request by OEM, such documents for procurements for less than $100,000. Subrecipient shall include with its RFR a list of all procurements issued during the period covered by the report.

ii. All subagreements, whether negotiated or competitively bid and without regard to dollar value, shall be conducted in a manner that encourages fair and open competition to the maximum practical extent possible. All sole-source procurements in excess of $100,000 must receive prior written approval from OEM in addition to any other approvals required by law applicable to Subrecipient. Justification for sole-source procurement in excess of $100,000 should include a description of the program and what is being contracted for, an explanation of why it is necessary to contract noncompetitively, time constraints and any other pertinent information. Interagency agreements between units of government are excluded from this provision.

iii. Subrecipient shall be alert to organizational conflicts of interest or non-competitive practices among contractors that may restrict or eliminate competition or otherwise restrain trade. Contractors that develop or draft specifications, requirements, statements of work, or Requests for Proposals (RFP) for a proposed procurement shall be excluded from bidding or submitting a proposal to compete for the award of such procurement. Any request for exemption must be submitted in writing to OEM.

iv. Subrecipient agrees that, to the extent it uses contractors, such contractors shall use small, minority, women-owned or disadvantaged business concerns and contractors or subcontractors to the extent practicable.

b. **Purchases and Management of Property and Equipment; Records.** Subrecipient agrees to comply with all applicable federal requirements referenced in Exhibit B, Section II.C.1 to this Agreement and procedures for managing and maintaining records of all purchases of property and equipment will, at a minimum, meet the following requirements:

i. All property and equipment purchased under this agreement, whether by Subrecipient or a contractor, will be conducted in a manner providing full and open competition and in accordance with all applicable procurement requirements, including without limitation ORS chapters 279A, 279B, 279C, and purchases shall be recorded and maintained in Subrecipient's property or equipment inventory system.

ii. Subrecipient's property and equipment records shall include: a description of the property or equipment; the manufacturer's serial number, model number, or other identification number; the source of the property or equipment, including the Catalog of Federal Domestic Assistance (CFDA) number; name of person or entity holding title to the property or equipment; the acquisition date; cost and percentage of Federal participation in the cost; the location, use and condition of the property or equipment; and any ultimate disposition data including the date of disposal and sale price of the property or equipment.

iii. A physical inventory of the property and equipment must be taken and the results reconciled with the property and equipment records at least once every two years.

iv. Subrecipient must develop a control system to ensure adequate safeguards to prevent loss, damage, or theft of the property and equipment. Subrecipient shall investigate any loss, damage, or theft and shall provide the results of the investigation to OEM upon request.

v. Subrecipient must develop, or require its contractors to develop, adequate maintenance procedures to keep the property and equipment in good condition.

vi. If Subrecipient is authorized to sell the property or equipment, proper sales procedures must be established to ensure the highest possible return.

vii. Subrecipient agrees to comply with 2 CFR 200.313 pertaining to use and disposal of equipment purchased with Grant Funds, including when original or replacement equipment acquired with Grant Funds is no longer needed for the original project or program or for other activities currently or previously supported by a Federal agency.

viii. Subrecipient shall require its contractors to use property and equipment management requirements that meet or exceed the requirements provided herein applicable to all property and equipment purchased with Grant Funds.

ix. Subrecipient shall, and shall require its contractors to, retain, the records described in this Section 9.b. for a period of six years from the date of the disposition or replacement or transfer at the discretion of OEM. Title to all property and equipment purchased with Grant Funds shall vest in Subrecipient if Subrecipient provides written certification to OEM that it will use the property and equipment for purposes consistent with the Emergency Management Performance Grant Program.

c. **Subagreement indemnity; insurance.** Subrecipient's subagreement(s) shall require the other party to such subagreements(s) that is not a unit of local government as defined in ORS 190.003, if any, to indemnify, defend, save and hold harmless OEM and its officers, employees and agents from and against any and all claims, actions, liabilities, damages, losses, or expenses, including attorneys' fees, arising from a tort, as now or hereafter defined in ORS 30.260, caused, or alleged to be caused, in whole or in part, by the negligent or willful acts or omissions of the other party to Subrecipient's subagreement or any of such party's officers, agents, employees or subcontractors ("Claims"). It is the specific intention of the Parties that OEM shall, in all instances, except for Claims arising solely from the negligent or willful acts or omissions of OEM, be indemnified by the other party to Subrecipient's subagreement(s) from and against any and all Claims.

Any such indemnification shall also provide that neither Subrecipient's contractor(s) nor any attorney engaged by Subrecipient's contractor(s) shall defend any claim in the name of OEM or any agency of the State of Oregon (collectively "State"), nor purport to act as legal representative of the State or any of its agencies, without the prior written consent of the Oregon Attorney General. The State may, at any time at its election, assume its own defense and settlement in the event that it determines that Subrecipient's contractor is prohibited from defending State or that Subrecipient's contractor is not adequately defending State's interests, or that an important governmental principle is at issue or that it is in the best interests of State to do so. State reserves all rights to pursue claims it may have against Subrecipient's contractor if State elects to assume its own defense.

Subrecipient shall require the other party, or parties, to each of its subagreements that are not units of local government as defined in ORS 190.003 to obtain and maintain insurance of the types and in the amounts provided in Exhibit C to this Agreement.

10. Termination

a. **Termination by OEM.** OEM may terminate this Agreement effective upon delivery of written notice of termination to Subrecipient, or at such later date as may be established by OEM in such written notice, if:

   i. Subrecipient fails to perform the Project within the time specified herein or any extension thereof or commencement, continuation or timely completion of the Project by Subrecipient is, for any reason, rendered improbable, impossible, or illegal; or

   ii. OEM fails to receive funding, appropriations, limitations or other expenditure authority sufficient to allow OEM, in the exercise of its reasonable administrative discretion, to continue to make payments for performance of this Agreement; or

   iii. Federal or state laws, rules, regulations or guidelines are modified or interpreted in such a way that the Project is no longer allowable or no longer eligible for funding under this Agreement; or

   iv. The Project would not produce results commensurate with the further expenditure of funds; or

   v. Subrecipient takes any action pertaining to this Agreement without the approval of OEM and which under the provisions of this Agreement would have required the approval of OEM.

   vi. OEM determines there is a material misrepresentation, error or inaccuracy in Subrecipient's application.

b. **Termination by Subrecipient.** Subrecipient may terminate this Agreement effective upon delivery of written notice of termination to OEM, or at such later date as may be established by Subrecipient in such written notice, if:

   i. The requisite local funding to continue the Project becomes unavailable to Subrecipient; or

   ii. Federal or state laws, rules, regulations or guidelines are modified or interpreted in such a way that the Project is no longer allowable or no longer eligible for funding under this Agreement.

c. **Termination by Either Party.** Either Party may terminate this Agreement upon at least ten days notice to the other Party and failure of the other Party to cure within the period provided in the notice, if the other Party fails to comply with any of the terms of this Agreement.

d. **Settlement upon Termination.** Immediately upon termination under Sections 10.a.i., v. or vi., no Grant Funds shall be disbursed by OEM, and Subrecipient shall return to OEM Grant Funds previously disbursed to Subrecipient by OEM in accordance with Section 6.c and the terminating party may pursue additional remedies in law or equity. Upon termination pursuant to any other provision in this Section 10, no further Grant Funds shall be disbursed by OEM and Subrecipient shall return funds to OEM in accordance with Section 6.c, except that Subrecipient may pay, and OEM shall disburse, funds for obligations incurred and approved by OEM up to the day that the non-terminating party receives the notice of termination. Termination of this Agreement does not relieve Subrecipient of any other term of this Agreement that may survive termination, including without limitation Sections 11.a and c.

11. GENERAL PROVISIONS

a. **Contribution.** If any third party makes any claim or brings any action, suit or proceeding alleging a tort as now or hereafter defined in ORS 30.260 ("Third Party Claim") against OEM or Subrecipient with respect to which the other Party may have liability, the notified Party must promptly notify the other Party in writing of the Third Party Claim and deliver to the other Party a copy of the claim, process, and all legal pleadings with respect to the Third Party Claim. Each Party is entitled to participate in the defense of a Third Party Claim, and to defend a Third Party Claim with counsel of its own choosing. Receipt by a Party of the notice and copies required in this paragraph and meaningful opportunity for the Party to participate in the investigation, defense and settlement of the Third Party Claim with counsel of its own choosing are conditions precedent to that Party's liability with respect to the Third Party Claim.

With respect to a Third Party Claim for which OEM is jointly liable with Subrecipient (or would be if joined in the Third Party Claim), OEM shall contribute to the amount of expenses (including attorneys' fees), judgments, fines and amounts paid in settlement actually and reasonably incurred and paid or payable by Subrecipient in such proportion as is appropriate to reflect the relative fault of OEM on the one hand and of Subrecipient on the other hand in connection with the events which resulted in such expenses, judgments, fines or settlement amounts, as well as any other relevant equitable considerations. The relative fault of OEM on the one hand and of Subrecipient on the other hand shall be determined by reference to, among other things, the Parties' relative intent, knowledge, access to information and opportunity to correct or prevent the circumstances resulting in such expenses, judgments, fines or settlement amounts. OEM's contribution amount in any instance is capped to the same extent it would have been capped under Oregon law, including the Oregon Tort Claims Act, ORS 30.260 to 30.300, if OEM had sole liability in the proceeding.

With respect to a Third Party Claim for which Subrecipient is jointly liable with OEM (or would be if joined in the Third Party Claim), Subrecipient shall contribute to the amount of expenses (including attorneys' fees), judgments, fines and amounts paid in settlement actually and reasonably incurred and paid or payable by OEM in such proportion as is appropriate to reflect the relative fault of Subrecipient on the one hand and of OEM on the other hand in connection with the events which resulted in such expenses, judgments, fines or settlement amounts, as well as any other relevant equitable considerations. The relative fault of Subrecipient on the one hand and of OEM on the other hand shall be determined by reference to, among other things, the Parties' relative intent, knowledge, access to information and opportunity to correct or prevent the circumstances resulting in such expenses, judgments, fines or settlement amounts. Subrecipient's contribution amount in any instance is capped to the same extent it would have been capped under Oregon law, including the Oregon Tort Claims Act, ORS 30.260 to 30.300, if it had sole liability in the proceeding.

b. **Dispute Resolution.** The Parties shall attempt in good faith to resolve any dispute arising out of this Agreement. In addition, the Parties may agree to utilize a jointly selected mediator or arbitrator (for non-binding arbitration) to resolve the dispute short of litigation. Each party shall bear its own costs incurred under this Section 11.b.

c. **Responsibility for Grant Funds.** Any recipient of Grant Funds, pursuant to this Agreement with OEM, shall assume sole liability for that recipient's breach of the conditions of this Agreement, and shall, upon such recipient's breach of conditions that requires OEM to return funds to the FEMA, hold harmless and indemnify OEM for an amount equal to the funds received under this Agreement; or if legal limitations apply to the indemnification ability of the recipient of Grant

Funds, the indemnification amount shall be the maximum amount of funds available for expenditure, including any available contingency funds or other available non-appropriated funds, up to the amount received under this Agreement.

d. **Amendments.** This Agreement may be amended or extended only by a written instrument signed by both Parties and approved as required by applicable law.

e. **Duplicate Payment.** Subrecipient is not entitled to compensation or any other form of duplicate, overlapping or multiple payments for the same work performed under this Agreement from any agency of the State of Oregon or the United States of America or any other party, organization or individual.

f. **No Third Party Beneficiaries.** OEM and Subrecipient are the only Parties to this Agreement and are the only Parties entitled to enforce its terms. Nothing in this Agreement gives, is intended to give, or shall be construed to give or provide any benefit or right, whether directly or indirectly, to a third person unless such a third person is individually identified by name herein and expressly described as an intended beneficiary of the terms of this Agreement.

   Subrecipient acknowledges and agrees that the Federal Government, absent express written consent by the Federal Government, is not a party to this Agreement and shall not be subject to any obligations or liabilities to Subrecipient, contractor or any other party (whether or not a party to the Agreement) pertaining to any matter resulting from the this Agreement.

g. **Notices.** Except as otherwise expressly provided in this Section, any communications between the parties hereto or notice to be given hereunder shall be given in writing by personal delivery, facsimile, email or mailing the same by registered or certified mail, postage prepaid to Subrecipient or OEM at the appropriate address or number set forth on the signature page of this Agreement, or to such other addresses or numbers as either party may hereafter indicate pursuant to this Section. Any communication or notice so addressed and sent by registered or certified mail shall be deemed delivered upon receipt or refusal of receipt. Any communication or notice delivered by facsimile shall be deemed to be given when receipt of the transmission is generated by the transmitting machine. Any communication or notice by personal delivery shall be deemed to be given when actually delivered. Any communication by email shall be deemed to be given when the recipient of the email acknowledges receipt of the email. The parties also may communicate by telephone, regular mail or other means, but such communications shall not be deemed Notices under this Section unless receipt by the other party is expressly acknowledged in writing by the receiving party.

h. **Governing Law, Consent to Jurisdiction.** This Agreement shall be governed by and construed in accordance with the laws of the State of Oregon without regard to principles of conflicts of law. Any claim, action, suit or proceeding (collectively, "Claim") between OEM (or any other agency or department of the State of Oregon) and Subrecipient that arises from or relates to this Agreement shall be brought and conducted solely and exclusively within the Circuit Court of Marion County in the State of Oregon. In no event shall this section be construed as a waiver by the State of Oregon of any form of defense or immunity, whether sovereign immunity, governmental immunity, immunity based on the eleventh amendment to the Constitution of the United States or otherwise, from any Claim or from the jurisdiction of any court. Each party hereby consents to the exclusive jurisdiction of such court, waives any objection to venue, and waives any claim that such forum is an inconvenient forum.

i. **Compliance with Law.** Subrecipient shall comply with all federal, state and local laws, regulations, executive orders and ordinances applicable to the Agreement or to the implementation of the Project, including without limitation as described in Exhibit B. Without limiting the generality of the foregoing, Subrecipient expressly agrees to comply with (i) Title VI of Civil Rights Act of 1964; (ii) Title V and Section 504 of the Rehabilitation Act of 1973; (iii) the Americans with Disabilities Act of 1990 and ORS 659A.142; (iv) all regulations and administrative rules established pursuant to the foregoing laws; and (v) all other applicable requirements of federal and state civil rights and rehabilitation statutes, rules and regulations.

j. **Insurance; Workers' Compensation.** All employers, including Subrecipient, that employ subject workers who provide services in the State of Oregon shall comply with ORS 656.017 and provide the required Workers' Compensation coverage, unless such employers are exempt under ORS 656.126. Employer's liability insurance with coverage limits of not less than $500,000 must be included. Subrecipient shall ensure that each of its subrecipient(s), contractor(s), and subcontractor(s) complies with these requirements.

k. **Independent Contractor.** Subrecipient shall perform the Project as an independent contractor and not as an agent or employee of OEM. Subrecipient has no right or authority to incur or create any obligation for or legally bind OEM in any way. OEM cannot and will not control the means or manner by which Subrecipient performs the Project, except as specifically set forth in this Agreement. Subrecipient is responsible for determining the appropriate means and manner of performing the Project. Subrecipient acknowledges and agrees that Subrecipient is not an "officer", "employee", or "agent" of OEM, as those terms are used in ORS 30.265, and shall not make representations to third parties to the contrary.

l. **Severability.** If any term or provision of this Agreement is declared by a court of competent jurisdiction to be illegal or in conflict with any law, the validity of the remaining terms and provisions shall not be affected, and the rights and obligations of the Parties shall be construed and enforced as if this Agreement did not contain the particular term or provision held to be invalid.

m. **Counterparts.** This Agreement may be executed in two or more counterparts (by facsimile or otherwise), each of which is an original and all of which together are deemed one agreement binding on all Parties, notwithstanding that all Parties are not signatories to the same counterpart.

n. **Integration and Waiver.** This Agreement, including all Exhibits and referenced documents, constitutes the entire agreement between the Parties on the subject matter hereof. There are no understandings, agreements, or representations, oral or written, not specified herein regarding this Agreement. The delay or failure of either Party to enforce any provision of this Agreement shall not constitute a waiver by that Party of that or any other provision. Subrecipient, by the signature below of its authorized representative, hereby acknowledges that it has read this Agreement, understands it, and agrees to be bound by its terms and conditions.

THE PARTIES, by execution of this Agreement, hereby acknowledge that each Party has read this Agreement, understands it, and agrees to be bound by its terms and conditions.

SIGNATURE PAGE TO FOLLOW

CLATSOP COUNTY

By _____

Name _____
(printed)

Date _____

APPROVED AS TO LEGAL SUFFICIENCY
(If required for Subrecipient)

By _____
Subrecipient's Legal Counsel

Date 12-1-2016

OEM

By _____

Clint Fella
Mitigation and Recovery Services Section Manager, OEM

Date _____

APPROVED AS TO FORM

By Marvin D. Fjordbeck
Senior Assistant Attorney General

Date November 21, 2016

Subrecipient Program Contact:
Tiffany Brown
Emergency Manager
Clatsop County
800 Exchange St; Suite 400
Astoria, OR 97103
503-325-8645
tbrown@co.clatsop.or.us

OEM Program Contact:
Kelly Jo Craigmiles
Operations and Emergency Program Coordinator
Oregon Military Department
Office of Emergency Management
PO Box 14370
Salem, OR 97309-5062
503-378-2865
kelly.jo.craigmiles@state.or.us

Subrecipient Fiscal Contact:
Tiffany Brown
Emergency Manager
Clatsop County
800 Exchange St; Suite 400
Astoria, OR 97103
503-325-8645
tbrown@co.clatsop.or.us

OEM Fiscal Contact:
Angela Creasey
Senior Grants Accountant
Oregon Military Department
Office of Emergency Management
PO Box 14370
Salem, OR 97309-5062
503-378-3316
angela.creasey@state.or.us

EXHIBIT A

Project Description and Budget

I. Project Description

The FY2016 EMPG Program focuses on the development and sustainment of core capabilities as outlined in the National Preparedness Strategy. Particular emphasis is placed on building and sustaining capabilities that address high consequence events that pose the greatest risk to the security and resilience of the United States. Capabilities are the means to accomplish a mission, function, or objective based on the performance of related tasks, under specified conditions, to target levels of performance. The FY2016 EMPG Work Plan identifies the specific tasks to be performed towards the development and sustainment of core capabilities in Subrecipient's jurisdiction. The funds from this agreement are meant to supplement a portion of Subrecipient's day-to-day operational costs for Emergency Management, as outlined in Subrecipient's approved Work Plan. The Work Plan may be updated upon approval by OEM.

II. Budget

Personnel	$ 145,504
Total	**$ 145,504**

EXHIBIT B

Federal Requirements and Certifications

I. General. Subrecipient agrees to comply with all federal requirements applicable to this Agreement, including without limitation financial management and procurement requirements and maintain accounting and financial records in accordance with Generally Accepted Accounting Principles (GAAP) and financial, administrative, and audit requirements as set forth in the most recent versions of the Code of Federal Regulations (CFR), Department of Homeland Security (DHS) program legislation, and DHS/Federal Emergency Management Agency (FEMA) regulations.

II. Specific Requirements and Certifications

A. **Debarment, Suspension, Ineligibility and Voluntary Exclusion.** Subrecipient certifies by accepting funds under this Agreement that neither it nor its principals are presently debarred, suspended, proposed for debarment, declared ineligible, nor voluntarily excluded from participation in this transaction by any Federal department or agency (2 CFR 200.213).

B. **Standard Assurances and Certifications Regarding Lobbying.** Subrecipient is required to comply with 2 CFR 200.450 and the authorities cited therein, including 31 USC § 1352 and *New Restrictions on Lobbying* published at 55 Federal Register 6736 (February 26, 1990.)

C. **Compliance with Applicable Law.** Subrecipient agrees to comply with all applicable laws, regulations, program guidance, and guidelines of the State of Oregon, the Federal Government and OEM in the performance of this Agreement, including but not limited to:

1. Administrative Requirements set forth in 2 CFR Part 200, including without limitation:
   a. Using Grant Funds only in accordance with applicable cost principles described in 2 CFR Subpart E, including that costs allocable to this Grant may not be charged to other Federal awards to overcome fund deficiencies, to avoid restrictions imposed by federal statutes, regulations or the terms of federal awards or other reasons;
   b. Subrecipient must establish a Conflict of Interest policy applicable to any procurement contract or subawards made under this Agreement in accordance with 2 CFR 200.112. Conflicts of Interest must be disclosed in writing to the OEM within 5 calendar days of discovery including any information regarding measures to eliminate, neutralize, mitigate or otherwise resolve the conflict of interest.
2. USA Patriot Act of 2001, which amends 18 USC §§ 175-175c.
3. Section 6 of the Hotel and Motel Fire Safety Act of 1990, 15 USC 2225(a).
4. 31 USC 3729, prohibiting recipients of federal payments from submitting a false claim for payment. *See* 38 USC 3801-3812 detailing administrative remedies for false claims and statements made.
5. 10 USC §§ 2409 and 2324 and 41 USC §§ 4712, 4304 and 4310 requiring compliance with whistleblower protections, as applicable.
6. No supplanting. Grant Funds under this Agreement shall not replace funds that have been budgeted for the same purposes through non-Federal sources. Subrecipient may be required to demonstrate and document that a reduction in non-Federal resources occurred for reasons other than receipt or expected receipt of Federal funds.

D. Non-discrimination and Civil Rights Compliance, Equal Employment Opportunity Program, and Services to Limited English Proficient (LEP) Persons.

1. **Non-discrimination and Civil Rights Compliance.** Subrecipient, and all its contractors and subcontractors, assures compliance with all applicable nondiscrimination laws, including but not limited to:

   a. Title VI of the Civil Rights Act of 1964, 42 USC § 2000d et seq., as amended, and related nondiscrimination regulations in 6 CFR Part 21 and 44 CFR Part 7.

   b. Title VIII of the Civil Rights Act of 1968, 42 USC § 3601, as amended, and implementing regulations at 6 CFR Part 21 and 44 CFR Part 7.

   c. Titles I, II, and III of the Americans with Disabilities Act of 1990, as amended, 42 USC §§ 12101 – 12213.

   d. Age Discrimination Act of 1975, 42 USC § 6101 et seq.

   e. Title IX of the Education Amendments of 1972, as amended, 20 USC § 1681 et seq.

   f. Section 504 of the Rehabilitation Act of 1973, as amended, 29 USC § 794, as amended.

   g. If, during the past three years, Subrecipient has been accused of discrimination on the grounds of race, color, national origin (including limited English proficiency), sex, age, disability, religion, or familial status, Subrecipient must provide a letter certifying that all documentation of such proceedings, pending or completed, including outcome and copies of settlement agreements will be made available to OEM upon request. In the event any court or administrative agency makes a finding of discrimination on grounds of race, color, national origin (including limited English proficiency), sex, age, disability, religion, or familial status against Subrecipient, or Subrecipient settles a case or matter alleging such discrimination, Subrecipient must forward a letter to OEM summarizing the finding and making a copy of the complaint and findings available to OEM.

2. **Equal Employment Opportunity Program.** Subrecipient, and any of its contractors and subcontractors, certifies that an equal employment opportunity program will be in effect on or before the effective date of this Agreement. Subrecipient must maintain a current copy on file.

3. **Services to Limited English Proficient (LEP) Persons.** Subrecipient, and any of its contractors and subcontractors agrees to comply with the requirements Title VI of the Civil Rights Act of 1964 and Executive Order 13166, improving Access to Services for Persons with Limited English Proficiency, and resulting agency guidance, national origin and resulting agency guidance, national origin discrimination includes discrimination on the basis of LEP. To ensure compliance with Title VI, Subrecipient must take reasonable steps to ensure that LEP persons have meaningful access to your programs. Meaningful access may entail providing language assistance services, including oral and written translation, where necessary. Subrecipient is encouraged to consider the need for language services for LEP persons served or encountered both in developing budgets and in conducting programs and activities. For assistance additional information regarding LEP obligations, please see http://www.lep.gov.

E. Environmental and Historic Preservation.

1. Subrecipient shall comply with all applicable Federal, State, and local environmental and historic preservation (EHP) requirements and shall provide any information requested by FEMA to ensure compliance with applicable environmental and historic preservation laws including but not limited to:

   a. National Environmental Policy Act of 1969, as amended, 42 USC § 4321, and related FEMA regulations, 44 CFR Part 10.

   b. National Historic Preservation Act, 16 USC § 470 et seq.

   c. Endangered Species Act, 16 USC § 1531 et seq.

   d. Executive Orders on Floodplains (11988), Wetlands (11990) and Environmental Justice (12898).

   Failure of Subrecipient to meet Federal, State, and local EHP requirements and obtain applicable permits may jeopardize Federal funding.

2. Subrecipient shall not undertake any project without prior EHP approval by FEMA, including but not limited to communications towers, physical security enhancements, new construction, and modifications to buildings, structures, and objects that are 50 years old or greater. Subrecipient must comply with all conditions placed on the project as the result of the EHP review. Any change to the approved project scope of work will require re-evaluation for compliance with these EHP requirements. If ground disturbing activities occur during project implementation, Subrecipient must ensure monitoring of ground disturbance and if any potential archeological resources are discovered, Subrecipient will immediately cease construction in that area and notify FEMA and the appropriate State Historic Preservation Office. Any construction activities that have been initiated without the necessary EHP review and approval will result in a non-compliance finding and will not be eligible for FEMA funding.

3. For any of Subrecipient's or its contractors' or subcontractors' existing programs or activities that will be funded by these grant funds, Subrecipient, upon specific request from the U.S. DHS, agrees to cooperate with the U.S. DHS in any preparation by the U.S. DHS of a national or program environmental assessment of that funded program or activity.

F. PROCUREMENT OF RECOVERED MATERIALS. Subrecipient must comply with Section 6002 of the Solid Waste Disposal Act, as amended by the Resource Recovery and Conservation Act and in accordance with Environmental Protection Agency guidelines at 40 CFR Part 247.

G. SAFECOM. If the Grant Funds are for emergency communication equipment and related activities, Subrecipient must comply with SAFECOM Guidance for Emergency Communication Grants, including provisions on technical standards that ensure and enhance interoperable communications.

H. Drug Free Workplace Requirements. Subrecipient agrees to comply with the requirements of the Drug-Free Workplace Act of 1988, 41 USC § 701 et seq., as amended, and implementing regulations at 2 CFR Part 3001 which require that all organizations receiving grants (or subgrants) from any Federal agency agree to maintain a drug-free workplace. Subrecipient must notify this office if an employee of Subrecipient is convicted of violating a criminal drug statute. Failure to comply with these requirements may be cause for debarment.

I. **Human Trafficking (2 CFR Part 175).** Subrecipient must comply with requirements of Section 106(g) of the Trafficking Victims Protection Act of 2000, 22 USC § 7104, as amended and 2 CFR § 175.15.

J. **Fly America Act of 1974.** Subrecipient agrees to comply with the requirements of the Preference for U.S. Flag Air Carriers: (air carriers holding certificates under 49 USC § 41102) for international air transportation of people and property to the extent that such service is available, in accordance with the International Air Transportation Fair Competitive Practices Act of 1974, as amended, (49 USC § 40118) and the interpretative guidelines issued by the Comptroller General of the United States in the March 31, 1981, amendment to the Comptroller General Decision B138942.

K. **Activities Conducted Abroad.** Subrecipient agrees to comply with the requirements that project activities carried on outside the United States are coordinated as necessary with appropriate government authorities and that appropriate licenses, permits, or approvals are obtained.

L. **Acknowledgement of Federal Funding from DHS.** Subrecipient agrees to comply with requirements to acknowledge Federal funding when issuing statements, press releases, requests for proposals, bid invitations, and other documents describing projects or programs funded in whole or in part with Federal funds.

M. **Copyright.** Subrecipient shall affix the applicable copyright notices of 17 USC § 401 or 402 and an acknowledgement of Government sponsorship (including Subgrant number) to any work first produced under an award unless the work includes any information that is otherwise controlled by the Government (e.g., classified information or other information subject to national security or export control laws or regulations). For any scientific, technical, or other copyright work based on or containing data first produced under this Agreement, including those works published in academic, technical or professional journals, symposia proceedings, or similar works, Subrecipient grants the Government a royalty-free, nonexclusive and irrevocable license to reproduce, display, distribute copies, perform, disseminate, or prepare derivative works, and to authorize others to do so, for Government purposes in all such copyrighted works.

N. **Patents and Intellectual Property Rights.** Unless otherwise provided by law, Subrecipient is subject the Bayh-Dole Act, 35 USC § 200 et seq., as amended, including requirements governing the development, reporting and disposition of rights to inventions and patents resulting from financial assistance awards, 37 CFR Part 401, and the standard patent rights clause in 37 CFR § 401.14.

O. **Use of DHS Seal, Logo and Flags.** Subrecipient agrees to obtain DHS's approval prior to using the DHS seal(s), logos, crests or reproductions of flags or likenesses of DHS agency officials, including use of the United States Coast Guard seal, logo, crests or reproductions of flags or likenesses of Coast Guard officials.

P. **Personally Identifiable Information (PII).** Subrecipient, if it collects PII, is required to have a publically available privacy policy that described what PII they collect, how they use it, whether they share it with third parties and how individuals may have their PII corrected where appropriate.

Q. **Federal Debt Status.** Subrecipient shall be non-delinquent in its repayment of any federal debt. Examples of relevant debt include delinquent payroll and other taxes, audit disallowances, benefit overpayments and any amounts due under Section 11.c of this Agreement. See OMB Circular A-129 for additional information and guidance.

R. **Construction Contracts.**

1. Except as otherwise provided under 41 CFR Part 60, all contracts that meet the definition of "federally assisted construction contract" in 41 CFR Part 60–1.3 must include the equal opportunity clause provided under 41 CFR 60–1.4(b), in accordance with Executive Order 11246, "Equal Employment Opportunity" (30 FR 12319, 12935, 3 CFR Part, 1964–1965 Comp., p. 339), as amended by Executive Order 11375, "Amending Executive Order 11246 Relating to Equal Employment Opportunity," and implementing regulations at 41 CFR part 60, "Office of Federal Contract Compliance Programs, Equal Employment Opportunity, Department of Labor."

2. When required by Federal program legislation, all prime construction contracts in excess of $2,000 awarded by non–Federal entities must include a provision for compliance with the Davis–Bacon Act (40 U.S.C. 3141–3144, and 3146–3148) as supplemented by Department of Labor regulations (29 CFR Part 5, "Labor Standards Provisions Applicable to Contracts Covering Federally Financed and Assisted Construction").

3. Contracts awarded by Grantee in excess of $100,000 that involve the employment of mechanics or laborers must include a provision for compliance with 40 U.S.C. 3702 and 3704, as supplemented by Department of Labor regulations (29 CFR Part 5).

4. Contracts and subgrants of amounts in excess of $150,000 must contain a provision that requires the non–Federal award to agree to comply with all applicable standards, orders or regulations issued pursuant to the Clean Air Act (42 U.S.C. 7401–7671q) and the Federal Water Pollution Control Act as amended (33 U.S.C. 1251–1387).

S. **Funding Agreements.** If the Federal award meets the definition of "funding agreement" under 37 CFR § 401.2 (a) and Grantee wishes to enter into a contract with a small business firm or nonprofit organization regarding the substitution of parties, assignment or performance of experimental, developmental, or research work under that "funding agreement," Grantee must comply with the requirements of 37 CFR Part 401, "Rights to Inventions Made by Nonprofit Organizations and Small Business Firms Under Government Grants, Contracts and Cooperative Agreements," and any implementing regulations issued by the awarding agency.

EXHIBIT C

Subagreement Insurance Requirements

GENERAL.

Subrecipient shall require in its first tier subagreements with entities that are not units of local government as defined in ORS 190.003, if any, to: i) obtain insurance specified under TYPES AND AMOUNTS and meeting the requirements under ADDITIONAL INSURED, "TAIL" COVERAGE, NOTICE OF CANCELLATION OR CHANGE, and CERTIFICATES OF INSURANCE before performance under the subagreement commences, and ii) maintain the insurance in full force throughout the duration of the subagreement. The insurance must be provided by insurance companies or entities that are authorized to transact the business of insurance and issue coverage in the State of Oregon and that are acceptable to State. Subrecipient shall not authorize work to begin under subagreements until the insurance is in full force. Thereafter, Subrecipient shall monitor continued compliance with the insurance requirements on an annual or more frequent basis. Subrecipient shall incorporate appropriate provisions in the subagreement permitting it to enforce compliance with the insurance requirements and shall take all reasonable steps to enforce such compliance. In no event shall Subrecipient permit work under a subagreement when Subrecipient is aware that the contractor is not in compliance with the insurance requirements. As used in this section, "first tier" means a subagreement in which Subrecipient is a Party.

TYPES AND AMOUNTS.

i. WORKERS COMPENSATION. Insurance in compliance with ORS 656.017, which requires all employers that employ subject workers, as defined in ORS 656.027, to provide workers' compensation coverage for those workers, unless they meet the requirement for an exemption under ORS 656.126(2). Employers liability insurance with coverage limits of not less than $500,000 must be included.

ii. COMMERCIAL GENERAL LIABILITY.

Commercial General Liability Insurance covering bodily injury, death, and property damage in a form and with coverages that are satisfactory to State. This insurance shall include personal injury liability, products and completed operations. Coverage shall be written on an occurrence form basis, with not less than the following amounts as determined by OEM:

Bodily Injury, Death and Property Damage:

$500,000 per occurrence (for all claimants for claims arising out of a single accident or occurrence).

iii. AUTOMOBILE Liability Insurance: Automobile Liability.

Automobile Liability Insurance covering all owned, non-owned and hired vehicles. This coverage may be written in combination with the Commercial General Liability Insurance (with separate limits for "Commercial General Liability" and "Automobile Liability"). Automobile Liability Insurance must be in not less than the following amounts as determined by OEM:

Bodily Injury, Death and Property Damage:

$500,000 per occurrence (for all claimants for claims arising out of a single accident or occurrence).

ADDITIONAL INSURED. The Commercial General Liability Insurance and Automobile Liability insurance must include OEM, its officers, employees and agents as Additional Insureds but only with respect to the contractor's activities to be performed under the Subcontract. Coverage must be primary and non-contributory with any other insurance and self-insurance.

"TAIL" COVERAGE. If any of the required insurance policies is on a "claims made" basis, such as professional liability insurance, the contractor shall maintain either "tail" coverage or continuous "claims made" liability coverage, provided the effective date of the continuous "claims made" coverage is on or before the effective date of the Subcontract, for a minimum of 24 months following the later of : (i) the contractor's completion and Subrecipient's acceptance of all Services required under the Subcontract or, (ii) the expiration of all warranty periods provided under the Subcontract. Notwithstanding the foregoing 24-month requirement, if the contractor elects to maintain "tail" coverage and if the maximum time period "tail" coverage reasonably available in the marketplace is less than the 24-month period described above, then the contractor may request and OEM may grant approval of the maximum "tail " coverage period reasonably available in the marketplace. If OEM approval is granted, the contractor shall maintain "tail" coverage for the maximum time period that "tail" coverage is reasonably available in the marketplace.

NOTICE OF CANCELLATION OR CHANGE. The contractor or its insurer must provide 30 days' written notice to Subrecipient before cancellation of, material change to, potential exhaustion of aggregate limits of, or non-renewal of the required insurance coverage(s).

CERTIFICATE(S) OF INSURANCE. Subrecipient shall obtain from the contractor a certificate(s) of insurance for all required insurance before the contractor performs under the Subcontract. The certificate(s) or an attached endorsement must specify: i) all entities and individuals who are endorsed on the policy as Additional Insured and ii) for insurance on a "claims made" basis, the extended reporting period applicable to "tail" or continuous "claims made" coverage.

Exhibit D

Information required by 2 CFR 200.331(a)

1. Federal Award Identification:

(i) Sub-recipient name (which must match registered name in DUNS): Clatsop County

(ii) Sub-recipient's DUNS number: 118455844

(iii) Federal Award Identification Number (FAIN): EMS-2016-EP-00003-S01

(iv) Federal Award Date: August 12, 2016

(v) Sub-award Period of Performance Start and End Date: From July 1, 2016 to June 30, 2017

(vi) Amount of Federal Funds Obligated by this Agreement: $72,752

(vii) Total Amount of Federal Funds Obligated to the Subrecipient by the pass-through entity including this Agreement: * $102,752

(viii) Total Amount of Federal Award committed to the subrecipient by the pass-through entity: $72,752

(ix) Federal award project description: Emergency Management Performance Grant (EMPG) Program provides resources to assist state, local, tribal, and territorial governments in preparing for all hazards, as authorized by the Robert T. Stafford Disaster Relief and Emergency Assistance Act (Stafford Act) (42 U.S.C 5121 et seq.).

(x) (a) Name of Federal awarding agency: U.S. Department of Homeland Security, Federal Emergency Management Agency (FEMA)
(b) Name of pass-through entity: Oregon Military Department, Office of Emergency Management
(c) Contact information for awarding official of the pass-through entity: Andrew Phelps, Director, PO Box 14370, Salem, OR 97309-5062

(xi) CFDA Number and Name: 97.042, Emergency Management Performance Grants
Amount: $5,226,218

(xii) Is Award R&D? No

(xiii) Indirect cost rate for the Federal award: 0%

2. Subrecipient's indirect cost rate: 0%

*The Total amount of Federal Funds Obligated to the Subrecipient by the pass-through entity is the Total Amount of Federal Funds Obligated to the Subrecipient by the pass-through entity during the current Federal fiscal year.

Agenda Item # 6-f

Board of Commissioners
Clatsop County

AGENDA ITEM SUMMARY

December 14, 2016

Issue/Agenda Title: Consider approving the creation of a three parcel partition plat of the North Coast Business Park.

Category: Consent

Prepared By: Vance Swenson, County Surveyor

Presented By: Michael Summers, Public Works Director

Issue before the Commission: Consider approving the creation of a three parcel partition plat of the North Coast Business Park.

Informational Summary: Clatsop County Public Works recommends the approval of a new 3 parcel partition plat within the North Coast Business Park. This new partition plat will also dedicate to the public the 100 foot wide right-of-way as depicted between the existing Big Beams LLC property and the new Parcel 2 on the proposed plat. Currently, Clatsop County has one lawfully created unit of land in the NCBP. ORS 92.010(9) restricts the partitioning of a property into no more than three parcels per calendar year. Therefore, public works recommends creating three parcels in 2016 on this partition plat in anticipation of future partitioning in 2017. The three proposed parcel boundaries follow existing right-of way lines and also conform to the NCBP Master Plan. There are no immediate sales or transactions pending for this partition; it is simply to dedicate the right-of-way for future road construction and lay the foundation for future parcel creation.

Fiscal Impact: Approximately $1200 in fees for planning application, title report, and plat recording.

Options to Consider:

1. Approve the creation partition plat and authorize the Chair to sign the plat declaration and any documents related to the partition plat.
2. Do not approve and direct staff to make changes to the plat
3. Do not approve the creation of the plat

Staff Recommendation: Option #1

Recommended Motion: *"I move to approve the creation of the partition plat of the North Coast Business Park and authorize the Chair to sign the final plat declaration and any documents related to the partition plat.*

Attachment List:

A. Proposed Partition Plat Exhibit Map

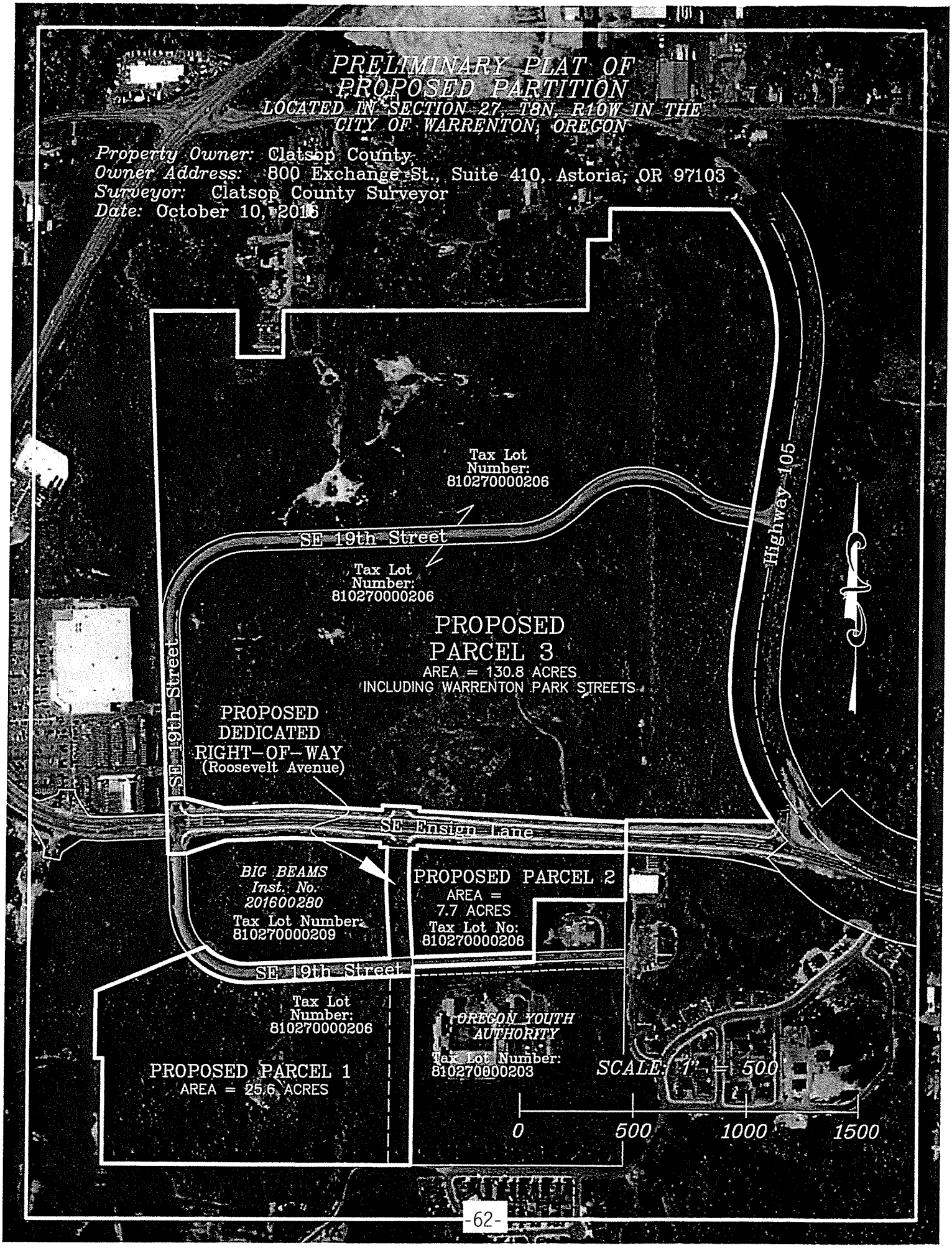
PRELIMINARY PLAT OF
PROPOSED PARTITION
LOCATED IN SECTION 27, T8N, R10W IN THE
CITY OF WARRENTON, OREGON
Property Owner: Clatsop County
Owner Address: 800 Exchange St., Suite 410, Astoria, OR 97103
Surveyor: Clatsop County Surveyor
Date: October 10, 2016
Tax Lot Number: 810270000206
SE 19th Street
Tax Lot Number: 810270000206
Highway 105
PROPOSED PARCEL 3
AREA = 130.8 ACRES
INCLUDING WARRENTON PARK STREETS
SE 19th Street
PROPOSED DEDICATED RIGHT-OF-WAY
(Roosevelt Avenue)
SE Ensign Lane
BIG BEAMS
Inst. No. 201600280
Tax Lot Number: 810270000209
PROPOSED PARCEL 2
AREA = 7.7 ACRES
Tax Lot No: 810270000206
SE 19th Street
Tax Lot Number: 810270000206
PROPOSED PARCEL 1
AREA = 25.6 ACRES
OREGON YOUTH AUTHORITY
Tax Lot Number: 810270000203
SCALE: 1" = 500
0
500
1000
1500

Board of Commissioners
Clatsop County

AGENDA ITEM SUMMARY

December 14, 2016

Issue/Agenda Title: 2016-17 Appropriation Adjustments as Required by ORS 294.463.

Category: Consent Calendar

Prepared By: Sandy Meshke, Accountant III

Presented By: Monica Steele, Budget & Finance Director

Issue before the Commission: Approve the 2016-17 appropriation adjustments as required by ORS 294.463.

Informational Summary: Attached is the R&O required by ORS 294.463 for budget adjustments for fiscal year 2016-17. These adjustments are required to avoid being in violation of budget law due to an unanticipated increase in property taxes for County Parks; and per recommendation from our auditors, we need to establish a reserve account for the Westport Sewer DEQ loan; and an adjustment needs to be made within appropriation categories for the County Tourism organization unit.

The need for the budget adjustment is further explained in the attached Schedule "A".

Fiscal Impact: The potential fiscal impact is $0 as these adjustments are transfers within organizational units and/or funds, or within a fund that has adequate budgeted contingency; therefore the adjustment is for appropriation authority only.

Options to Consider:

1. Approve the appropriation adjustments as required by ORS 294.463.
2. There are no other options to consider.

Staff Recommendation: Option #1

Recommended Motion: *"I move that the Board approve the appropriation adjustments to remain in compliance with Oregon budget law per ORS 294.463."*

Attachment List: Schedule "A" Appropriation Adjustments.

Schedule A

2016-17 Budget Adjustments

I. ADJUSTMENT INVOLVING A TRANSFER OF APPROPRIATION AUTHORITY BETWEEN ORGANIZATIONAL UNITS WITHIN A FUND

ORGANIZATION UNIT/FUND	INCREASE	DECREASE
Parks Maintenance 001/1795/82-3800	$100	
Appropriation for Contingency 001/9900/82-9901		$100

Comment: This adjustment is due to an unanticipated increase in property taxes for the 2016-17 fiscal year. This expense will be offset by contingency and is for appropriation authority only.

II. ADJUSTMENTS INVOLVING A TRANSFER OF APPROPRIATION AUTHORITY BETWEEN CATEGORIES WITHIN THE SAME ORGANIZATIONAL UNIT

ORGANIZATION UNIT/FUND	INCREASE	DECREASE
County Tourism 001/1110/82-3575	$216,000	
County Tourism 001/1110/82-2471		$216,000

Comment: This adjustment is to move the use of County Tourism dollars from Contractual Services to Special Payments-Contingency to Outside Agencies. This adjustment is for appropriation authority only.

Westport Sewer Service District 385/5845/82-3822	$3,720	
Westport Sewer Service District 385/5845/82-2240	$4,800	
Westport Sewer Service District 385/5845/82-9900		$8,520

Comment: This adjustment is due to a recommendation from our auditors that we establish a reserve account for the Westport Sewer DEQ loan. The reserve amount is one-half of the average annual debt service based on the final repayment schedule. In addition, an adjustment is necessary to cover an unanticipated fine within the fund. This adjustment is for appropriation authority only.

IN THE BOARD OF COUNTY COMMISSIONERS

FOR CLATSOP COUNTY, OREGON

In the matter of the adjustment of the fiscal year 2016-17 budget and appropriations by authorizing transfer of appropriations between organizational units within a fund; and authorizing transfer of appropriations between categories within an organizational unit; per ORS 294.463.	)	RESOLUTION AND ORDER

It appearing to the Board that there is a need to make adjustments in the fiscal year 2016 -17 budget by transferring appropriations between organizational units in the same fund and transferring appropriations between categories within an organizational unit.

Where as the need for said adjustments, the purpose of the authorized expenditures and the amount of appropriations adjustments, is more particularly described in the Schedule of 2016-17 Budget Adjustments attached hereto and incorporated herein as Schedule "A"; and

Where as it appearing to the Board that such adjustments are allowed pursuant to ORS 294.463; now, therefore, it is

RESOLVED AND ORDERED that the Schedule of 2016-17 Budget Adjustments attached hereto as Schedule "A" be approved.

ADOPTED AND APPROPRIATED this 14th Day of December 2016.

BOARD OF COUNTY COMMISSIONERS
FOR CLATSOP COUNTY, OREGON

_____

Scott Lee, Chair

Page 1 of 1 - RESOLUTION AND ORDER

Board of Commissioners
Clatsop County

AGENDA ITEM SUMMARY

December 14, 2016

Issue/Agenda Title: Long-Term Financial Plan Contract

Category: Consent Calendar

Prepared By: Monica Steele, Budget & Finance Director

Presented By: Monica Steele, Budget & Finance Director

Issue before the Commission: Consideration for the County to sign a Professional Services Agreement with Talbot, Korvola, & Warwick, LLP to update the County's existing Long-Term Financial Plan.

Informational Summary: It has been over 10 years since the county has updated the existing Long-Term Financial Plan and while this plan has served the county well during the recent down turn in the economy, staff feels it is important to re-evaluate the plan for areas that can be improved upon with the changing economy, as well as addressing any practices that are no longer relevant.

The approach to updating the plan will include: Assessing the financial condition of the county; assessing the repair and replacement requirements for county infrastructure; reserves analysis; reviewing, summarizing, and recommending Financial Sustainability Policies and Plans; reviewing, summarizing, and recommending Financial Management Policies and Plan; and obtaining and reviewing the existing Key Performance Indicators associated with the county's financial performance in comparison to other municipalities and identify applicable KPIs to be used by the county to measure its long-range financial objectives. Further detail of the approach can be found in the proposal under Section 3 – Approach.

Fiscal Impact: This project was budgeted in the 2016-17 fiscal year in the Special Projects fund, the not to exceed amount of the contract with TKW is $35,050 which falls within the appropriated budget authority.

Options to Consider:

1. Authorize the County Manager to sign the Personal/Professional Services agreement with Talbot, Korvola, & Warwick, LLP to update the county's Long-Term Financial Plan.
2. Select an alternate firm that submitted a proposal.
3. Go back out for additional quotes with the understanding that this project may cross over into the 2017-18 fiscal year.

Staff Recommendation: Option #1

1. **Recommended Motion:** *"I move that the Board authorize the County Manager to sign the Personal/Professional Services agreement with Talbot, Korvola, & Warwick, LLP."*

Attachment List:

A. Exhibit A - Proposal from Talbot, Korvola, & Warwick, LLP
B. Exhibit B - Request for Proposal for Long-Term Financial Plan Preparation
C. Personal/Professional Services agreement

Exhibit A

ACHIEVE MORE

Talbot, Korvola & Warwick, LLP

4800 Meadows Road, Suite 200
Lake Oswego, OR 97035

P503.274.2849
F503.274.2853

www.tkw.com

October 12, 2016

Ms. Monica Steele, Budget & Finance Director
Clatsop County
800 Exchange Street, Suite 310
Astoria, Oregon 97103

Dear Ms. Steele:

Talbot, Korvola & Warwick, LLP (TKW) is pleased to provide Clatsop County with the following proposal to provide a long-term financial plan. We have provided a variety of financial and operational advisory services to municipal governments through Oregon and Washington. Our proposed project team has:

- extensive experience assisting in the development of financial plans; conducting cost allocation reviews; and providing performance audits, organizational reviews, needs assessments, and program evaluations for state and local agencies throughout the Pacific Northwest.
- a long history of working with government managers to review, establish, and implement programs.
- an approach that provides sound, implementable recommendations based on specific County needs and best practices.
- the ability to provide detailed, understandable reports.
- a process that assures "no surprises."

The following provides a brief overview of our experience, proposed key personnel and resumes; approach; and proposed hourly rates.

We appreciate the opportunity to provide you with this quote. Please let us know if you need any additional information or have any questions. As your Project Manager, I am available to answer any potential questions and can be reached by phone at (503) 274-2849, fax (503) 274-2853, or email rmoody@tkw.com.

Sincerely,

Rob Moody, Partner
Talbot, Korvola & Warwick, LLP

RSM US Alliance RSM

RSM US Alliance provides its members with access to resources of RSM US LLP. RSM US Alliance member firms are separate and independent businesses and legal entities that are responsible for their own acts and omissions, and each are separate and independent from RSM US LLP RSM US LLP is the U.S member firm of RSM International, a global network of independent audit, tax, and consulting firms. Members of RSM US Alliance have access to RSM International resources through RSM US LLP but are not member firms of RSM International. Visit rsmus.com/about us for more information regarding RSM US LLP and RSM International The RSM™ logo is used under license by RSM US LLP. RSM US Alliance products and services are proprietary to RSM US LLP.

1. Firm Qualifications and Experience

TKW is a limited liability partnership located in Lake Oswego, Oregon. Since our inception in 1987, we have grown to become one of the top ten largest CPA and consulting firms in Oregon. While our size has changed, our business model has not. We continue to offer traditional assurance and tax services and extensive business advisory assistance designed to meet the diverse needs of governments, not-for-profits, and small and mid-sized businesses.

We are one of the leading government service providers in Oregon and Washington. A large portion of our business advisory hours are directly related to services provided to the public sector. Our team members have offered financial and strategic plan development, cost allocation assessments, internal audit services, determination of key performance indicators/metrics; Yellow Book performance audits, organizational evaluations, and efficiency and effectiveness review services to all sizes and types of governmental entities and operations ranging from small divisional operations to departments with multi-million dollar budgets. Our full-time business consultants have combined their financial and accounting backgrounds with additional skill sets in areas such as:

- long-term financial plan development
- risk assessments
- internal audit assistance
- business process and practices
- internal controls
- vendor selection
- business planning
- information technology assessment and evaluation
- cost allocation
- financial application needs assessments
- strategic planning
- LEAN/Six Sigma
- organizational assessments
- construction management
- policy/procedures development

We are widely recognized for our timely, cost-effective, implementable, and value-added recommendations. We assist organizations in becoming more effective, more efficient, and more productive. Our findings have identified millions of dollars in cost savings and opportunities to use resources more effectively.

To ensure our team members maintain a current level of knowledge in a variety of topics, TKW invests substantially in Continuing Professional Education (CPE) both as participants in educational courses and in the teaching of technical subjects. Our professionals also maintain affiliations with various organizations to stay current on pertinent topics, network, and receive CPE. Our team members are actively involved in various committees and projects associated with these professional organizations:

- American Institute of Certified Public Accountants
- Institute of Management Accountants
- National Association of Local Government Auditors
- Oregon Government Finance Officers Association
- Oregon Society of CPA's
- Association of Government Auditors
- The Institute for Internal Controls

TKW has been a participant in the American Institute of Certified Public Accountants quality (peer) review program since its inception. Firms may receive a peer review rating of "pass", "pass with deficiencies," or "fail". Our latest letter, issued July 24, 2015, resulted in a peer review rating of "pass". The review included several government engagements reflective of our practice.

TKW is proud to have been chosen to be a member of the RSM US Alliance. RSM US LLP, a national accounting firm, is the fifth largest provider of accounting, tax, and consulting services in the United States, serving clients' needs from more than 120 offices nationwide. Our relationship with the Alliance allows us to draw upon the additional resources, experience, and professional knowledge base of a national organization that is a leader in serving governmental entities. We maintain our name, autonomy, and independence as a locally owned accounting and consulting firm responsible for our own client fee arrangements, delivery of services, and maintenance of client relationships. Our local presence and business model, combined with the resources of a national accounting firm is the best of both worlds for our clients.

Providing financial and management advisory services to various municipalities has allowed us to gain an understanding and expertise in many different operational areas. The following are a few examples of projects our team has conducted for public agencies to help demonstrate our experience:

Client	Project
City of Portland	Liens, Collections and Foreclosures Process - Review and assessment of organizational structure, business practices
City of Oregon City, OR	Business Licensing - Review and assessment of organizational structure and business practices
Washington State Gambling Commission	Cost Allocation Study
Washington County	Finance Department - Operational review focusing on reviewing and interpreting financial processes; understanding of local code; statistical analysis; and survey of similar organizations.
Klamath County Fire District No. 1	Financial projections and analysis related to impacts of labor contract negotiations on operations and reserve levels over a 5-year period.

Specific Experience/References

Our proposed team has a variety of experience and expertise directly relevant to the scope of work identified in your request. The following are specific projects and contact information to demonstrate our abilities and knowledge in conducting your requested services.

Financial Forecasting

Contact: John Spradley, Fire Chief
Email: JSpradley@kcfd1.com
Phone: 541.891.3101

Project Description:
Worked with the Klamath County Fire District No. 1 to project revenues and expenditure out five (5) years in an effort to identify the fiscal sustainability of the General Fund under a number of established assumptions. Considered impacts of labor contracts, equipment maintenance and replacement, property tax and contract revenues, and various scenarios involving each. Provided input and recommendations to the District towards reestablishing reserves and fund balances in line with best practices and continued viability of the District.

Permit and Inspection Fees

Contact: Chris Cortines, Principal Performance Auditor
Email: cortinec@sao.wa.gov
Phone: 360.628.7752

Project Description:
On behalf of the Washington State Auditor's Office, TKW completed an audit of eight counties to determine the reasonableness of building permit and inspection fees to include:

1. Determining whether eight selected counties' agricultural, residential and commercial permitting application fees were limited to what was necessary to cover direct and indirect permitting costs.
2. Identifying the methods used by each county to calculate agricultural, residential, and commercial planning and permit fees and how those methods matched up with direction provided by state law (Chapter 82.02.020 RCW and Chapter 19.27.015 RCW). Assessing whether the methods ensure fees were no greater than what was necessary to pay the direct and indirect costs of planning and permitting.
3. Identifying uniform guidance to help counties determine allowable costs and how to allocate them to the permitting program.

Most of the eight counties reviewed had not identified all costs specifically associated with the permitting process and did not necessarily have a process in place to adequately do so. In addition, revenues received from permit fees in many of these counties had, in the past, been greater than expenses associated with the permitting process. These additional funds had been used to help support other county services. This practice was not allowed under state laws and could result in modifications to the level and types of services provided by some counties. Our review identified a methodology to accurately account for all costs.

2. Proposed Key Personnel and Resumes

We have identified four key team members to assist in the development of a long-term financial plan for the County. While these team members will be the primary consultants assigned to this project, we can call upon a wealth of additional resources as necessary to ensure timely, effective services and to provide additional knowledge, skills, and abilities, as needs are identified.

With 45 team members, we have the expertise and capacity to ensure projects are completed on-time and within budget. We understand the integrated nature of project delivery techniques and their potential impact on project costs. In addition to our dedicated consulting team, TKW's large governmental assurance practice gives us a pool of knowledgeable team members to call upon as required to complete a project within almost any time frame.

The following identifies the key team members that will be working on this project. Each of the team members identified below has specific experience in the specific areas requested by the County. Resumes for each can be found in Appendix A. Individually and collectively, we are committed to successfully providing Clatsop County with long-term financial planning assistance.

Rob Moody, CPA, Project Manager
Rob with nearly 30 years of direct governmental experience, will serve as project manager. As a TKW partner, he has guided our governmental assurance practice and has been extensively involved in assisting clients in various financial and process related activities. He has served as the Assistant Finance Director at the City of Wilsonville and Finance Director at the Cities of Sherwood and The Dalles. Rob is a speaker nationally, regionally, and locally on topics of governmental auditing, accounting and reporting. Rob is a graduate of Western Washington University with a degree in Accounting and is a licensed CPA in Oregon and Washington.

Rob's has performed a number of cost studies and evaluations for local governments in Oregon and Washington and is widely identified as a resource for his expertise in government finance and accounting. His client-centered style and background in local government allows Rob to bring a unique perspective to issues and problem solving that is both practical and implementable.

As project manager, Rob will be responsible for all aspects of the project including: planning individual assignments, coordinating interviews, compiling documentation, modeling alternatives, facilitating discussions, and ensuring documentation meets all TKW and professional standards. Rob will also ensure that the project results in a satisfactory product and is delivered on time. He will be the County's main contact and will have final authority for the project.

Brad Rafish, CGFM, CICA,
Brad, a graduate of the University of Montana earning both Bachelor's degree and an MBA, is a Certified Government Financial Manager (CGFM) and a Certified Internal Controls Auditor (CICA). In his more than 30 years of experience, he has conducted cost allocation studies, identified alternative revenue sources, developed and documented detailed policies and procedures; performed risk assessments; identified key performance indicators; provided internal audit services, performance audits, organizational reviews, IT assessments, management studies, and efficiency and effectiveness evaluations; and completed needs assessments for a variety of governmental organizations. Brad has also performed financial, compliance, SSAE 16 and sunset audits and has assessed a variety of regulatory agencies. He has established specific programs and developed "how-to" manuals for local and regional governments, school districts, and public utilities.

Anne Nottingham
Anne has 30 years of experience collecting, organizing, analyzing, and reporting data including over 15 years conducting evaluations, organizational assessments, and Yellow Book performance audits of governmental entities. She has worked on numerous projects including reviews of such areas as procurement, organizational structures, administrative operations, governance, service delivery, benchmarking, and resource allocation. Projects have included aligning operations with missions, vision, goals, and objectives, identifying operational efficiencies, evaluating internal controls, documenting and developing policies and procedures, and reviewing compliance with contracts, and rules and regulations.

For each of our internal audit projects, Anne has been a key team member, interviewing

applicable staff, reviewing and analyzing relevant documentation, assuring compliance where applicable, comparing an entity's processes with similar organizations and best practices, and report writing and presentation. She has also participated in financial audits of various municipalities, school districts, and businesses. Anne has a Bachelor's degree in Business Administration from Portland State University.

Danielle Bertrand
Danielle joined TKW in 2014 after an eight-year career in banking. Her analytical approach, process orientation and client service skills make her a natural resource to the County and an integral part of our team. Danielle is detail-oriented and has a background in compliance-based procedures. Her client-centered style and communications allow her to easily work with clients to understand and evaluate their work flows, processes and procedures in the context of a compliance-based environment. She has participated in various projects focusing and financial assessments, performance reviews, and cost allocation.

3. Approach

The ability to provide long-term financial planning assistance requires a broad set of analytical, technical, and process skills. Our experience has allowed us to refine our approach to ensure specific objectives are met efficiently and in the most cost beneficial manner possible. We work closely with our clients to ensure their expectations are being met and the final deliverables will meet their needs into the future. Our approach will consist of the following:

A. Financial Condition Assessment
   a. Indirect Cost Allocation Plan
      - Obtain and review information relating to the current County cost allocation methods used to allocate internal service costs to departments.
      - Interview applicable personnel to obtain a better understanding of the methods and bases used.
      - Summarize results.
   b. New Revenue Sources
      - Identify all current revenue sources in use by the County.
      - Using knowledge of local municipalities in Oregon and Washington, determine opportunities for potential sources.
      - Obtain examples from other municipalities through direct contact and from national resources (Tax Policy Center, Urban Institute, etc.), determine opportunities for potential sources.
      - Summarize opportunities.
   c. General Fund Cost Patterns
      - Obtain and review County general fund expenditures for the past five years.
      - Determine specific trends, patterns, etc. based on review.
      - Summarize expenditures.
   d. Recommendations
      - Identify recommendations, as appropriate, for modifying the County's current cost allocation method, if the County's methods are identified as being a good and

appropriate working model, to make the process more efficient, effective, and transparent.

B. Infrastructure Repair and Replacement Requirements
   - Obtain infrastructure inventory data for various systems, including details of construction, current condition, estimated useful lives, and replacement cost estimates.
   - Consider current County policies with respect to maintenance and replacement schedules in the context of best practices.
   - Calculate requirements for major repairs and maintenance projected into the future with estimated costs, incorporating assumptions for inflation, etc.
   - Compare projected inventory costs to current reserves and funding practices to identify potential surpluses or deficits.
   - Provide recommendations based on findings noted.

C. Reserve Analysis
   a. Types of Reserves
      - Identify and summarize requirements for establishment and maintenance of reserve funds in accordance with Oregon Local Budget Law.
   b. Schedule of Reserves
      - Schedule out the County's existing reserves and evaluate compliance with respect to stated purpose, current use, and funding in the context of Oregon Local Budget Law.
      - Compare to original intent of the County when respective reserves were established.
      - Evaluate and comment on use of reserves, adequate funding levels for each respective reserve, based on best practices and comparative analysis with other similar entities.
   c. Special Projects Fund
      - Analyze historical activity relative to intended purpose of the Fund at the time established.
      - Consider funding and expenditure patterns of the Fund, and project activity out five (5) years consistent with an established set of assumptions.
      - Provide recommendations on use and funding levels.
      - Consider timber receipts as a viable resource to the General Fund in the context of political, environmental and economic factors and variables.
      - Project annual timber receipts incorporating current known facts and assumptions, including recent political and legal actions taken or pending.
      - Present merits and disadvantages of various methodologies for receipt and use of timber monies in the General Fund.
   d. General Fund Stabilization Account
      - Obtain an understanding of the County's current Board-approved service levels for the General Fund as a benchmark through review of Board goals, budget information, performance objectives and measures, etc.
      - Project General Fund revenues and expenditures for the period 2017 through 2026 with the assumption of maintaining current service levels and evaluate the appropriateness of a stabilization account as a meaningful option in meeting the Board's goals.

- Consider and communicate necessary funding allocations to a potential stabilization account in order to maintain service levels over the projection period.

D. Financial Sustainability Policies and Plans
- Obtain and review all current, relevant, operational policies and plans to determine potential fiscal impacts on the County's long-term sustainability.
- Consider fiscal impacts of implementation and/or continuation of policies and plans in terms of FTE, direct and indirect dollar costs, and other resource requirements or allocations.
- Consider specific, dedicated resources identified with respective policies and plans, and those that are funded through general or discretionary means.
- Summarize findings and resulting recommendations with respect to all policies and plans reviewed.

E. Financial Management Policies and Plans
   a. Obtain and review all current, financial policies and plans.
   b. Determine appropriateness and impact on ability to manage County finances.
   c. Summarize results and recommend opportunities to enhance management practices.

F. Key Performance Indicators (KPIs)
   a. Obtain and review current KPIs associated with County financial performance.
   b. Based on knowledge and experience with other local governments, identify applicate KPIs in use.
   c. Obtain KPIs used by other municipalities.
   d. Identify applicable KPIs to be used by Clatsop County to measure its long-range financial objectives.

4. Hourly Rates

· Rob Moody	$195/hour
· Brad Rafish	$195/hour
· Anne Nottingham	$175/hour
· Danielle Bertrand	$125/hour
· Additional Resources	$135-$175/hour

5. Professional Discipline

TKW has not been sued or subject to any professional discipline in conncection with long-term financial planning for our clients.

6. Insurance Coverage

TKW maintains all required insurance coverages and minimum amounts. Clatsop County will be named as an additional insured upon contract award.

Rob joined TKW in 2004 after more than fifteen years of experience working as a government finance officer for cities in Oregon. His responsibilities as a finance officer included coordination of budget and audit cycles, process documentation and improvement, and coordinating interdepartmental support and information. Rob has a leadership and style that is client-centered and focused on the needs and wants of those served.

With TKW, Rob brings a strong customer service perspective to clients and a seasoned understanding of government operations and organizational issues. As a team member on this project, he will be involved with all aspects of the project, conducting interviews, researching best practices, and reporting

Robert G. Moody, Jr., CPA
Partner

Bachelor of Arts in Accounting
Western Washington University

Licensed CPA:
Oregon #6161
Washington #27284
Alaska #2467

American Institute of Certified Public Accountants

Oregon Society of Certified Public Accountants
Past Chair

OSCPA Legislative Policy Committee Chair

Recent Clients/Relevant Experience

- Portland Public Schools - Internal Audit Services
  Rob is a current member of the internal audit team and has participated in the District-wide risk assessment as well as the current Compensation assessment. He has conducted interviews, reviewed detail research and assisted in report writing.
- City of Vancouver, Washington - Procurement Assessment
  Rob participated in all phases of the project including performing interviews, evaluating results towards the formation of conclusions and findings, and assisted in the report-writing and presentation.
- Cover Oregon - Procurement Assessment
  Rob was the project manager for the performance audit of Cover Oregon, focusing primarily on compliance with requirements as stated in Oregon Revised Statutes, and the terms of Cover Oregon's Federal funding contract. Rob performed detailed testing as well as reviewed workpapers prepared by other members of the team, and coordinated the drafting and presentation of the final report.
- Benton County, Oregon
  Rob was a team member on the review of the interaction of the County's Finance Division with other departments, specifically in the context of financial transactions. Through interviews and documentation review, he developed specific recommendation regarding changes in organizational structure, reporting relationships, resource usage, procedures, reporting, and communication.
- Washington County Department of Health and Human Services, Oregon
  Rob was project manager for this engagement in respect to budgeting, internal financial management information and practices, external financial reporting support, and federal grant compliance and reporting. Rob was responsible for all aspects of the project including planning, review and assessment, client communication, reporting, and presentation.
- Financial statement and related compliance audits of:
  - Washington County and component units
  - Housing Authority of Washington County, Oregon
  - Tualatin Valley Fire & Rescue
  - City of Lake Oswego
  - City of Sherwood
  - Klamath County Fire District No. 1
  - Washington County Consolidated Communications Agency
  - Benton County
  - City of McMinnville
  - City of Beaverton
  - City of Milwaukie
  - Port of Newport
  - City of Lincoln City

Brad is a partner with our consulting practice including our information technology services. He has conducted organizational reviews, efficiency and effectiveness evaluations, internal controls reviews, management studies, and strategic planning for more than 30 years for a variety of governmental organizations, not-for-profit organizations, and small - mid-size businesses. He has examined such areas as: procurement, contracting, organizational structures, administrative operations, accountability, capital improvement, office systems, risk management, service delivery, overhead cost allocations, claims processing, problem resolution, business practices, problem resolution, information processing systems, financial systems, and customer satisfaction. In addition, Brad has performed financial, compliance, and sunset audits and has assessed a variety of regulatory agencies. He has established specific programs and developed how-to manuals for local and regional governments, public utilities, and small businesses.

Brad Rafish, MBA
Partner

Master of Business Administration
University of Montana

Bachelor of Business Administration
University of Montana

Certified Government Financial Manager

Certified Internal Controls Auditor

Association of Governmental Accountants

The Institute for Internal Controls

Recent Clients/Relevant Experience:

- Portland Public Schools - Internal Audit Services
  Brad is the current project manager on this project and participated in all aspects of the development of the District-wide risk assessment and developed the annual audit plan. He currently participates in all internal audits and reviews all work papers and reports.

- Business Oregon - Internal Audit Services
  Brad is the current project manager on this project and participated in all aspects of the development of the Agency-wide risk assessment and developed the annual audit plan. He currently participates in all internal audits and reviews all work papers and reports.

- Oregon Department of Environmental Quality - Internal Audit Services
  As the project manager on this project, Brad provided guidance to staff to ensure all objectives of the project were met. In addition, Brad conducted fieldwork, reviewed work papers, and took the lead in drafting and presenting the final report to the client.

- Snohomish County, Washington - Internal Audit Services
  Brad was the project manager for this project and completed a County-wide risk assessment, developed an annual audit plan, and developed the scope of work and completed the County's first audit. He also provided status reports to County liaisons, the County's audit committee, and the County's Board of Commissioners.

- Washington State Auditor's Office
  - Department of Transportation Performance Audit
  - Sound Transit Link Light Rail Performance Audit
  - Department of Transportation Congestion Audit
  - Eight Counties – Building Permit and Inspection Fees Performance Audit
    For each of the performance audits conducted on behalf of the SAO projects, Brad was the project manager. This included being the primary contact with the SAO and the audited entity's representatives. In addition, he was responsible for providing status reports, attending status meetings, and directing staff and expert contractors to ensure all of the objectives of the performance audits were being met. In addition, Brad was responsible for coordinating and finalizing the reports, presenting the reports to the SAO, the audited entity, and a committee of the legislature at public meetings. He was also responsible for ensuring that the proper documentation was obtained to support the final report.
  - Sound Transit Risk Assessment
    Brad was the project manager on the risk assessment of Sound Transit. This project identified various areas of risk associated with the Agency's operations and the practices and processes in place to mitigate those risks.

- Sound Transit – Follow-up to the Original Link Light Rail Performance Audit.
  Brad was the project manager the follow-up performance audit of Sound Transit's Link Light Rail. This project evaluated how Sound Transit had implemented our recommendations, examined how Sound Transit responded to the recession, and evaluated the assumptions used by Sound Transit's to formulate ridership forecasts.

- City of Portland - Performance Audit of its Liens, Collections, and Foreclosures Process
  Brad was the project manager on this project, and as such, provided guidance to staff to ensure all objectives of the project were met. In addition, Brad conducted some fieldwork, reviewed work papers, and took the lead in drafting and presenting the final report to the client.

  This project involved documenting processes used by multiple departments that use liens as a tool for collecting fees owed to the City. As part of the process, TKW examined how the City processed its complaint-driven code enforcement violations, and how unpaid violation fees were incorporated into a lien and how violations were resolved.

- Housing Authority of Clackamas County Performance Evaluation
  Brad was the project manager on this project. As such, he was responsible for assuring the project resulted in client satisfaction. He was responsible for directing staff, reviewing work papers, participated in status reports, and report writing, and presenting the report to the Board of County Commissioners. This project involved assessing compliance of programs with Federal, State, and County rules, regulations, and policies.

- Clackamas County Public & Government Affairs Performance Audit
  Brad was the project manager on this project. As such, he was responsible for assuring the project resulted in client satisfaction. He was responsible for directing staff, reviewing work papers, participated in status reports, report writing, and presenting the report to the Board of County Commissioners. This project involved reviewing how PGA worked with County Departments, citizen groups, and other stakeholders to assure communication via flyers, newsletters, website, etc. were developed timely and professionally, and sent to County residents.

- North Clackamas Parks & Recreation District - Review of the Milwaukie Center
  Brad was the project manager for a review of the Milwaukie Center. We were asked to determine whether the Center should focus on services for seniors or if should be targeting clients of all age groups. We interviewed NCP&RD and Center management and staff, patrons of the Center, the Friends of Milwaukie Center - the not-for-profit that helps the Center with fundraising efforts, and it's Advisory Board. Recommendations were made to continue its services to seniors while also targeting other age groups for when the Center is underutilized.

Anne Nottingham
Consulting Manager

BS, Portland State University

Anne has over 29 years of experience assessing governmental and small business operations including performance audits, efficiency and effectiveness evaluations, strategic planning, internal control reviews, procurement and contracting operations, and organizational structures. She has extensive experience assessing risk through the documentation and flowcharting of business processes, identifying and testing internal controls and concluding on their effectiveness. In addition, Anne has assisted small businesses and not-for-profits with business reviews, account analyses, and bookkeeping assistance

Anne has participated in financial audits of various municipalities and businesses and has assisted with compiling, organizing and reviewing work papers in relation to Yellow-Book performance audits, operational assessments, and organizational reviews.

Recent Clients/Relevant Experience

- Portland Public Schools - Internal Audit Services
  Anne assisted in the development of the District-wide risk assessment and annual audit plan. She currently is working on an assessment of the District's administrative compensation.

- Business Oregon - Internal Audit Services
  Anne is a key team member on this project and participated in all aspects of the development of the Agency-wide risk assessment and the annual audit plan. She currently is completing a review of administrative staffing for the Agency.

- Oregon Department of Environmental Quality - Internal Audit Services
  Anne was a key team member on this project, assisting with conducting the agency-wide risk assessment, and each of the audits that were performed. Tasks included conducting fieldwork such as documentation review and analysis and conducting interviews, report writing, and presentation to the client.

- Washington State Auditor's Office:
  - Department of Transportation Performance Audit
  - Sound Transit Link Light Rail Performance Audit
  - Department of Transportation Congestion Audit
  - Eight Counties – Building Permit and Inspection Fees Performance Audit
    For each of the projects listed above, Anne's main responsibilities included organizing and reviewing work papers in a program utilized by the SAO and ensuring that we had the necessary documentation to support the report. As needed, Anne participated in fieldwork, interviewing management and staff, observing operations, and analyzing documentation obtained from the audited entities. In addition, she assisted with drafting and presenting the final report to the client.
  - Sound Transit Risk Assessment
    Anne was one of the key team members on this project. Responsibilities included gathering information, working with the SAO and sound transit liaisons to obtain information, update supporting information for the matrices used to identify specific areas of risk, and assure documentation supported the final outcomes. This project identified various areas of risk associated with the Agency's operations and the practices and processes in place to mitigate those risks.
  - Sound Transit - Follow-up to the Original Link Light Rail Performance Audit.
    Anne worked closely with our consultants and the SAO to assure documentation was collected (and organized) to support our findings and recommendations of this follow-up performance audit of Sound Transit's Link Light Rail. This project

evaluated how Sound Transit had implemented our recommendations, examined how Sound Transit responded to the recession, and evaluated the assumptions used by Sound Transit's to formulate ridership forecasts.

- Housing Authority of Clackamas County Performance Evaluation
  Anne was a key team member on this project and was responsible for conducting fieldwork and research, participated in status reports, and report writing, and presenting the report to the Board of County Commissioners. This project involved assessing compliance of programs with Federal, State, and County rules, regulations, and policies.

- Clackamas County Public & Government Affairs Performance Audit
  Anne was the lead consultant on this project. Her responsibilities included interviewing PGA staff, conducting a survey of stakeholders and users of their services, examining the organizational structure of the Department, and contacting similar entities. Anne also participated in status reports, report writing, and presenting the report to the Board of County Commissioners. This project involved reviewing how PGA worked with County Departments, citizen groups, and other stakeholders to assure communication via flyers, newsletters, website, etc. were developed timely and professionally, and sent to County residents.

- City of Portland - Performance Audit of its Liens, Collections, and Foreclosures Process
  This project involved documenting processes used by multiple departments that use liens as a tool for collecting fees owed to the City. Anne was responsible for working with the various departments, such as the Code Enforcement Section, the Bureau of Transportation, Parks & Recreation, the Water Bureau, and others to document how a City fee was entered, tracked and resolved into the lien program.

Danielle Bertrand
Consultant

Linfield College, BA in Accounting

Oregon Society of Certified Public

Danielle joined TKW in 2014 and brings experience in both public accounting and private industry with over eight years of experience in the banking industry. Her diverse background brings a unique perspective to assisting our clients. Danielle has had the opportunity to prepare federal, state and local income tax returns for individuals and large and small businesses. She provides "back office" services including account analysis, reconciliations, and monthly reporting for a large international conference. Danielle also has recently provided a large Oregon school district with assistance in the identification and recording of capital information technology assets.

Danielle strives to provide clients with responsive and prompt service and enjoys assisting them with their success as their needs evolve.

Recent Clients/Relevant Experience

- Portland Public Schools - Internal Audit Services
  Danielle assisted in the development of the District-wide risk assessment and annual audit plan. She currently is working on an assessment of the District's administrative compensation.

- City of Vancouver, Washington
  Danielle was a team member on the review and assessment of the City's Procurement Services Division. She participated in all aspects of the project.

- City of Canby, Oregon
  Danielle provided direct budget support to the City in terms of evaluating historical information in support of budget projections, and assisting in the presentation of budget information for consideration by the City Council.

- Oregon Commission for the Blind
  Danielle was a team member on the review and assessment of the Commission's compliance with various aspects of Statute, federal funding requirements and Commission policies. She participated in all aspects of the project.

Exhibit B

CLATSOP COUNTY

Informal Request for Proposals For a Long - Term Financial Plan

Clatsop County
Budget & Finance Department
800 Exchange Street, Suite 310
Astoria, OR 97103
503-325-8565

I. Background Information

1. Clatsop County is located in the Northwest corner of Oregon and has a population of approximately 38,000. The county was established in 1844 and provides a full range of county services to its residents. The primary services include: Public Safety, Public Health, Planning, Building Codes, Public Works, Clerk & Elections, Assessment & Taxation, Juvenile Services, and Central Services support (i.e. HR, IT, Budget & Finance, Buildings & Grounds).

2. Clatsop County uses the home rule charter form of government, which is overseen by a five-member County Commission. All are part-time elected officials who exercise the legislative powers of the county and decide matters of policy.

3. The County Commissioners appoint a County Manager who is the chief administrative officer of the county. The County Manager appoints the department directors, and is responsible for carrying out the policies set by the Commission.

4. The county employs approximately 210 permanent full-time employees, and has other positions that are filled on a part-time, temporary, or voluntary basis.

5. The total adopted budget for FY 2016-2017 all funds is approximately $57.5 million. The General Fund is budgeted at approximately $21.9 million.

II. Scope of Work

Clatsop County believes a Long-Term Financial Plan must include:

1. Identify and assess the county's financial condition which includes, but is not limited to: revenue, expenditure and debt trends in total and for each of the ten years covered by the plan.
    a. Perform a cursory review of the county's Indirect Cost Allocation plan. Determine if the allocation bases are appropriate and validate the methodology.
    b. Suggest new revenue sources based on examples from other municipalities and counties in Oregon and from a review of nationwide examples. Consider user fees and taxes.
    c. Prepare an analysis of General Fund cost patterns for the past five years.
    d. Provide recommendations to ensure effective and efficient use of resources for overhead services relative to changes in the overall organization.

2. Review and analyze existing infrastructure repair and replacement requirements over 2017 to 2026 period and comment on adequacy and appropriateness of existing funding policies.

3. Reserve Analysis
    a. Prepare a brief explanation of the primary types of reserves in use or allowed by Oregon Budget Law, their purpose, and the methods of funding commonly used for existing reserves.
    b. Create a schedule of the county's current reserves; determine their stated purpose, actual current usage, and method of funding. Determine adequate reserve levels for the next 10 years for the county's General Fund and Special Projects Fund.
        i. Compare the reserves to those used in other similar jurisdictions of our size (by population) to determine which are common, which are unique, and what types Clatsop County has not utilized.
    c. Perform in-depth analysis of the Special Projects Fund. Prepare an analysis of the fund's activity for the last ten years and compare it to the current fund's purpose as stated in the Board's policies. Project the Special Projects Funds activity for the next five years using assumptions developed within the County. Project what, if any, portion of the annual timber receipts should be used for General Fund operations. If it is determined that using timber revenue for General Fund operations is appropriate, determine a funding level that the county can depend upon receiving annually, considering a variety of methodologies and the advantages and disadvantages of each methodology. Consider: Volatility of lumber prices, possible loss of timber revenue due to legislative action, environmental activity, etc.
    d. Analyze the need for a General Fund Stabilization account.
        i. Determine what the adequate funding level should be to stabilize General Fund operation at current Board approved levels of service and based on results of above section c.
        ii. Determine annual allocation needed to achieve stated goal in above section d.i.

4. Review existing plans/policies and their potential impact on the long term financial sustainability of the county.

5. Review existing financial policies/plans and recommend new policies to achieve sound financial management.

6. Recommend key financial performance indicators and targets which can be used as a basis for measuring and achieving the county's long range financial objectives.

III. Review of Business Process Information

1. In your response, please describe the specific plans and other mechanisms you will use to gather the required information from the county and develop the plan as well as an estimate of the amount of time required by county staff involved in developing the plan.

2. Provide an estimate of the overall amount of time to complete the project.

IV. Corporate Background

1. As part of your proposal, you must also include information addressing your corporate background. At a minimum, your response must include the following:

    a. Corporate background, including date established, type of ownership, location of corporate headquarters and major offices, and number of employees engaged in Long-Term Financial Planning.
    b. A list of Long-Term Financial Plans your company has completed in the last three years, highlighting any projects that were performed for local governments.

2. The county requires that Long-Term Financial Planning is a significant area of the vendor's expertise, and that the vendor has led the development of other major identifiable Long-Term Financial Plan processes in the recent past.

V. Staff Qualifications

1. Your proposal must include a list of names and qualifications of key personnel who will be involved with the county's project. Resumes must be included in the proposal. You must state your plan for ensuring the continuity of staff throughout the duration of the project.

VI. Statement of Costs

1. All costs associated with the proposal must be stated in full, breaking down the summary of costs (i.e. total hours, personnel costs, and expense costs).

2. Explicitly describe equipment, hardware and software the county must provide for this project.

3. Describe how much workspace you require on-site and any other special arrangements the county will be expected to accommodate.

4. Please note that total billing cannot exceed the proposed amount listed in your proposal.

VII. Minimum Requirements

1. Meet all tasks as outlined in Scope of Work.

VIII. Information/Instructions to Proposers

1. Clatsop County will not be liable for any costs incurred by proposers prior to issuance of an agreement, contract, or purchase order. All proposals and related documents will become the property of Clatsop County.

2. The county's Contract Administrator is Monica Steele, Budget & Finance Director.

3. **The proposal must be signed by a person authorized to bind the proposer to the proposal.**

4. Agreement for Professional Services: A SAMPLE agreement for Personal/Professional Services is included in the RFP documents as **Exhibit A**. If a contract is awarded, it is anticipated that the personal/professional services agreement will closely approximate this document to include in "supporting documents". The "supporting documents" will include, but are not limited to, the RFP document, the proposer's written proposal, and any required certificates and all other documents incorporated by reference therein. **Firms taking exception to any of the contract terms should indicate the same in their proposals or their exceptions will be deemed waived.**
5. Fee Structure:

    a. The contractor shall be paid a fixed fee for the project. Progress payments can be made to the contractor at reasonable intervals on achievement of measurable progress.

b. A fee schedule shall be furnished listing the hourly rates for any staff to be assigned to Clatsop County projects.
c. The county will reimburse the contractor for reasonable and necessary out-of-pocket and other related expenses. The county reserves the exclusive right to make the determination of reasonableness and necessity and will negotiate a not to exceed amount for reimbursable expenses.

6. Clatsop County reserves the right to:

   a. Reject any or all proposals or any portion thereof, or to select the proposal which, in its sole opinion, is in the best interest of the county. Proposals are subject to rejection if any omissions, conditional proposals, or irregularities of any kind exist.
   b. Accept a proposal and subsequent offers for contract from other than the lowest cost proposed.
   c. Consider proposals or modifications received at any time before the award is made, if such action is in the best interest of the county.
   d. Waive or modify any irregularities in proposals received, after prior notification to the proposer.

7. Equal Employment Opportunity/Affirmative Action Policy
   a. It is the policy of Clatsop County to promote equal opportunity to all persons regardless of race, color, religion, national origin, gender, age, or handicap, in respect to employment, housing, and public services facilities and accommodations. This policy is reinforced by obligations assumed by the county as a condition of receipt of federal and state funds. This policy thus becomes an obligation, which must be assumed by the contractor as well.

IX. Required Proposal Submittals

1. To be considered for this project, 1 original and 9 copies of each proposal must be submitted to the attention of Clatsop County Budget & Finance Department, 800 Exchange Street Suite 310, Astoria OR 97103. Envelope should be clearly marked: Long-Term Financial Plan. No email or facsimile proposals allowed.

2. Each submittal shall contain the following:

   a. The legal name of the firm, address, telephone, and email; as well as the name of the person whom correspondence and inquiries should be directed to;

b. A detail statement of the firm's qualifications and experience providing Long-Term Financial Planning. Specific experience with developing a municipal government Long-Term Financial Plan shall be discussed.
c. A list of principal(s) assigned to the county together with a statement of their expertise as demonstrated by direct experience in providing Long-Term Financial Planning. Your proposal must include a list of names of qualifications of key personnel who will be involved with the county's project. Resumes must be included as attachments to your proposal. You must also state your plan for ensuring the continuity of staff throughout the duration of the project.
d. At least five (5) references from municipal governments relating to the Long-Term Financial Plans completed in the last three (3) years. Give name(s) of government's contact person(s), phone number, email, and nature of the project. Preference is for Oregon references.
e. A statement of how the firm will provide services and address the scope of work of the RFP in **Section II**. This should include a discussion of how the firm works with a client, reports provided, responsibilities assumed by the firm, and the firm's expectation of what the county would provide during a project.
f. A fee schedule for hour rates for all staff to be assigned to the contract.
g. A statement disclosing whether this firm or any of its staff who would work on this contract have ever been sued or been subject to professional discipline in connection with Long-Term Financial Planning for any client. If such lawsuits or disciplinary actions have occurred, please summarize the allegations and indicate the outcome of the proceedings.
h. A statement of insurance coverages the firm has in effect or can obtain for this agreement.
i. Any supplementary information or material.

3. Deadline for receipt of all proposal submitted shall be physically received no later than September 23, 2016. In order to be considered for selection, proposals must arrive at the Budget & Finance Department on or before this date. Proposers mailing proposals should allow normal mail delivery time to ensure timely receipt of their proposals.

Selection Process & Evaluation Criteria

1. An evaluation team will evaluate all proposals received.

2. Interviews may be conducted with the top proposers.

3. Proposals will be evaluated based on the following criteria and final selection will be made based on the combined results of the proposal and interview:

    a. Qualification of firm
    b. Experience as Long-Term Financial Planners of staff assigned to this account as outlined in the proposal
    c. Evaluation of the work plan proposed relative to the Scope of Work set out herein
    d. Experience with local government entities
    e. Reference checks – The County reserves the right to investigate references and past performances of any proposer with respect to the successful performance of similar work.
    f. Fees quoted for the requested work

4. After evaluations and interviews have occurred a firm will be selected that will be best able to provide the identified services to the county based on an overall judgement of the proposal and interview. A recommendation will be presented to the Board of Commissioners for their consideration. After the Board's action, the firm and the county will enter into a standard Clatsop County Professional Services Agreement incorporating the terms and conditions of this RFP document and the response of the successful firm.

Exhibit Index

Request for Proposals for: Long – Term Financial Planning

Sample Personal Service Agreement	Exhibit A
Sample "Acord" Certificate of Insurance	Exhibit B

CLATSOP COUNTY, OREGON
800 Exchange Street, Suite 410
Astoria, Oregon 97103
An Equal Opportunity Employer

Contract No._____

PERSONAL/PROFESSIONAL SERVICES AGREEMENT

This AGREEMENT is by and between Clatsop County ("County") and _____ __ ("Contractor"). Whereas County has need of the services which Contractor has agreed to provide; NOW THEREFORE, in consideration of the sum not to exceed $_____ to be paid to Contractor by County, Contractor agrees to perform between date of execution and _____, inclusive, the following specific personal and/or professional services:

(*Attach additional information as Attachment A if appropriate or necessary*).

Payment Terms: *(lump sum, monthly installments, progress payments, etc. - Attach additional information as Exhibit B if appropriate):*

1. **COMPLETE AGREEMENT.** This Agreement contains the entire understanding of the parties and supersedes all prior agreements, oral or written, and all other communication between the parties relating to the subject matter of this Agreement.
2. **WRITTEN NOTICE.** Any notice of termination or other communication having a material effect on this Agreement shall be served by U.S. Mail on the signatories listed.
3. **GOVERNING LAW/VENUE.** This Agreement shall be governed by the laws of the State of Oregon. Any action commenced in connection with this Agreement shall be in the Circuit Court of Clatsop County. The prevailing party shall be entitled to reasonable attorney fees and costs, including an appeal. All rights and remedies of County shall be cumulative and may be exercised successively or concurrently. The foregoing is without limitation to or waiver of any other rights or remedies of County according to law.
4. **COMPLIANCE.** Contractor shall comply with all applicable Federal, State, and local laws, rules and regulations. All provisions of ORS 279B.220-235 (Public Contracts and Purchasing) are incorporated herein to the extent applicable to personal/professional service agreements. Specifically, Contractor shall:
   a. Promptly pay, as due, all persons supplying labor and material for the prosecution of the work provided of in such contract. If Contractor fails to pay any such claim, County may pay the claim and charge the payment against the funds due Contractor, pursuant to ORS 279B.220;
   b. Pay any required contributions due the Industrial Accident Fund incurred in the performance of

the contract;

c. Not permit any lien or claim to be filed or prosecuted against County, on account of any labor or material furnished by Contractor;

d. Pay the Department of Revenue all sums withheld from employees pursuant to ORS 316.167;.

e. Not employ any person more than 10 hours a day, or 40 hours a week, unless permitted under ORS 279B.235, and any employee working over 40 hours per week shall be paid overtime as provided in ORS 279B.235.

f. Pay promptly, as due, any payment for medical surgical or hospital care furnished to employees of Contractor, pursuant to ORS 279B.230.

g. If Contractor is a subject employer, Contractor will comply with ORS 656.017.

5. JUDICIAL RULINGS. If any provision of this-as applied to either party or to any circumstances shall be adjudged by a court to be void or unenforceable, the same shall in no way affect any other provision of this Agreement or the validity of enforceability of the Agreement.

6. INDEPENDENT CONTRACTOR. Contractor, in carrying out the services to be provided under this Agreement, is acting as an "independent contractor" and is not an employee of County, and as such accepts full responsibility for taxes or other obligations associated with payment for services under this Agreement. As an "independent contractor", Contractor will not receive any benefits normally accruing to County employees unless required by applicable law. Furthermore, Contractor is free to contract with other parties, on other matters, for the duration of this Agreement.

7. INDEMNIFICATION. Contractor shall save harmless, indemnify, and defend County for any and all claims, damages, losses and expenses including but not limited to reasonable attorney's fees arising out of or resulting from Contractor's performance of or failure to perform the obligations of this Agreement to the extent same are caused by the negligence or misconduct of Contractor or its employees or agents.

8. INSURANCE. Contractor shall purchase and maintain at Contractor's expense, Comprehensive General Liability, Automobile Liability, and Professional Liability insurance. This insurance is to provide separate coverage for each of the required types of insurance at a minimum of $600,000 for property damage and minimum of $700,000 per person for bodily injury and no less than $1,400,000 for each occurrence. In addition, all such insurance, with the exception of Professional Liability, shall name County, its Commissioners, employees and agents, as an **Additional Insured.** A copy of the policy or certificate of insurance acceptable to County shall be submitted to County. Some, or all, of the required insurance may be waived or modified if approved by County's counsel as follows:

_____

_____(approved by County Counsel)_____(Contractor's Initials)_____

9. WORKER'S COMPENSATION. Contractor shall comply with ORS 656.017 for all employees who work in the State of Oregon. If Contractor hires employees, he or she shall provide County with certification of Worker's Compensation Insurance, with employer's liability in the minimum of $100,000.

10. NONDISCRIMINATION. No person shall be subjected to discrimination in receipt of the benefits of any services or activities made possible by or resulting from this Agreement on the grounds of sex, race, color, creed, marital status, age or national origin. Any violation of this provision shall be considered a material violation of this Agreement and shall be grounds for cancellation, termination or suspension in whole or in part by County.

11. TERMINATION OF AGREEMENT. This Agreement may be terminated under the following conditions:

a. By written mutual agreement of both parties. Termination under this provision may be immediate.

b. Upon fifteen (15) calendar days written notice by either Party to the other of intent to terminate.

c. Immediately on breach of the contract.

12. SUBCONTRACTING/NONASSIGNMENT. No portion of this Agreement may be contracted to assigned to any other individual, firm, or entity without the express and prior approval of County.

13. **SURVIVAL.** The terms, conditions, representations and all warranties contained in this Agreement shall survive the termination or expiration of this Agreement.

14. **FUNDING.** In the event the Board of Commissioners of County reduces, changes, eliminates, or otherwise modifies the funding for any of the services identified, Contractor agrees to abide by any such decision including termination of service.

15. **STANDARD OF SERVICES AND WARRANTY.** Contractor agrees to perform its services with that standard of care, skill and diligence normally provided by a professional individual in the performance of similar services. It is understood that Contractor must perform the services based in part on information furnished by County and that Contractor shall be entitled to rely on such information. However, Contractor is given notice that County will be relying on the accuracy, competence and completeness of Contractor's services in utilizing the results of such services. Contractor warrants that the recommendations, guidance and performance of any person assigned under this Agreement shall be in accordance with professional standards and the requirements of this Agreement.

16. **COUNTY PRIORITIES.** Contractor shall comply promptly with any requests by County relating to the emphasis or relative emphasis to be placed on various aspects of the work or to such other matters pertaining to said work.

17. **OWNERSHIP AND USE OF DOCUMENTS.** All documents, or other material submitted to County by Contractor shall become the sole and exclusive property of County. All material prepared by Contractor under this Agreement may be subject to Oregon's Public Records Laws.

18. **TAX COMPLIANCE CERTIFICATION.** Contractor hereby certifies, under penalty of perjury, as provided in ORS 305.385(6), that to the best of Contractor's knowledge, Contractor is not in violation of any of the tax laws of this state or political subdivision of this state, including but not limited to ORS 305.380(4), 305.620 and ORS chapters 316, 317 and 318. Contractor represents that Contract will continue to comply with the tax laws of this state and any applicable political subdivision of this state during the term of the public contract. If Contractor's fails to comply with the tax laws of this state or a political subdivision of this during the term of this agreement, the Contractor shall be in default and County may terminate this agreement and pursue its remedies under the agreement and under applicable law.

This Agreement will not be effective until approved by the authorized signatory for County.

FOR COUNTY:

_____

Signature Date

_____

Title

FOR CONTRACTOR:

_____

Signature Date

_____

Title

_____

Address

_____

City State Zip

ACORD™ CERTIFICATE OF LIABILITY INSURANCE

DATE (MM/DD/YYYY) 10/23/2008

PRODUCER
Aon Risk Insurance Services West, Inc.
Los Angeles CA Office
707 Wilshire Boulevard
Suite 2600
Los Angeles CA 90017-0460 USA

PHONE (866) 283-7122 FAX (847) 953-5390

THIS CERTIFICATE IS ISSUED AS A MATTER OF INFORMATION ONLY AND CONFERS NO RIGHTS UPON THE CERTIFICATE HOLDER. THIS CERTIFICATE DOES NOT AMEND, EXTEND OR ALTER THE COVERAGE AFFORDED BY THE POLICIES BELOW.

INSURERS AFFORDING COVERAGE		NAIC #
INSURER A:	National Union Fire Ins Co of Pittsburgh	19445
INSURER B:	Insurance Company of the State of PA	19429
INSURER C:	Lexington Insurance Company	19437
INSURER D:	American International Specialty Lines	26883
INSURER E:		

EXHIBIT B
SAMPLE

SIR: May Apply

THE POLICIES OF INSURANCE LISTED BELOW HAVE BEEN ISSUED TO THE INSURED NAMED ABOVE FOR THE POLICY PERIOD INDICATED. NOTWITHSTANDING ANY REQUIREMENT, TERM OR CONDITION OF ANY CONTRACT OR OTHER DOCUMENT WITH RESPECT TO WHICH THIS CERTIFICATE MAY BE ISSUED OR MAY PERTAIN, THE INSURANCE AFFORDED BY THE POLICIES DESCRIBED HEREIN IS SUBJECT TO ALL THE TERMS, EXCLUSIONS AND CONDITIONS OF SUCH POLICIES. AGGREGATE LIMITS SHOWN MAY HAVE BEEN REDUCED BY PAID CLAIMS.

LIMITS SHOWN ARE AS REQUESTED

INSR LTR	ADD'L INSRD	TYPE OF INSURANCE	POLICY NUMBER	POLICY EFFECTIVE DATE(MM/DD/YY)	POLICY EXPIRATION DATE(MM/DD/YY)	LIMITS	
A		GENERAL LIABILITY [X] COMMERCIAL GENERAL LIABILITY [ ] CLAIMS MADE [X] OCCUR [X] X,C,U Coverage [ ] GEN'L AGGREGATE LIMIT APPLIES PER: [ ] POLICY [X] PRO-JECT [ ] LOC	GL1982538	10/01/08	10/01/09	EACH OCCURRENCE	$1,000,000
						DAMAGE TO RENTED PREMISES (Ea occurence)	$1,000,000
						MED EXP (Any one person)	$100,000
						PERSONAL & ADV INJURY	$1,000,000
						GENERAL AGGREGATE	$2,000,000
						PRODUCTS - COMP/OP AGG	$2,000,000
A		AUTOMOBILE LIABILITY [X] ANY AUTO [ ] ALL OWNED AUTOS [ ] SCHEDULED AUTOS [X] HIRED AUTOS [X] NON OWNED AUTOS [ ] [ ]	CA8263140	10/01/08	10/01/09	COMBINED SINGLE LIMIT (Ea accident)	$1,000,000
						BODILY INJURY (Per person)	
						BODILY INJURY (Per accident)	
						PROPERTY DAMAGE (Per accident)	
		GARAGE LIABILITY [ ] ANY AUTO [ ] [ ]				AUTO ONLY - EA ACCIDENT	
						OTHER THAN AUTO ONLY: EA ACC	
						AGG	
C		EXCESS /UMBRELLA LIABILITY [X] OCCUR [ ] CLAIMS MADE [ ] DEDUCTIBLE [X] RETENTION $50,000	2213731	10/01/08	10/01/09	EACH OCCURRENCE	$5,000,000
						AGGREGATE	$5,000,000
B B		WORKERS COMPENSATION AND EMPLOYERS' LIABILITY ANY PROPRIETOR / PARTNER / EXECUTIVE OFFICER/MEMBER EXCLUDED? If yes, describe under SPECIAL PROVISIONS below	WC4990695 WC4990697	10/01/08 10/01/08	10/01/09 10/01/09	X WC STATUTORY LIMITS / OTHER	
						E.L. EACH ACCIDENT	$1,000,000
						E.L. DISEASE-EA EMPLOYEE	$1,000,000
						E.L. DISEASE-POLICY LIMIT	$1,000,000
D		OTHER Contractor Prof	COPS1952583 Prof/Poll Liab	10/01/08	10/01/09	Each Claim	$5,000,000
						Agggregate	$5,000,000
						Deductible	$250,000

DESCRIPTION OF OPERATIONS/LOCATIONS/VEHICLES/EXCLUSIONS ADDED BY ENDORSEMENT/SPECIAL PROVISIONS
Stop Gap coverage for the following states: OH, ND, WA, WV, WY, PR, USVI.

CERTIFICATE HOLDER

Clatsop County
Attn: Sandy Meshke
800 Exchange St., Ste. 310
Astoria OR 97103-4641 USA

CANCELLATION

SHOULD ANY OF THE ABOVE DESCRIBED POLICIES BE CANCELLED BEFORE THE EXPIRATION DATE THEREOF, THE ISSUING INSURER WILL ENDEAVOR TO MAIL 30 DAYS WRITTEN NOTICE TO THE CERTIFICATE HOLDER NAMED TO THE LEFT, BUT FAILURE TO DO SO SHALL IMPOSE NO OBLIGATION OR LIABILITY OF ANY KIND UPON THE INSURER, ITS AGENTS OR REPRESENTATIVES.

AUTHORIZED REPRESENTATIVE Aon Risk Insurance Services West, Inc.

Holder Identifier :

Certificate No : 570031351371

CLATSOP COUNTY, OREGON
800 Exchange Street, Suite 410
Astoria, Oregon 97103
An Equal Opportunity Employer

Contract No._____

PERSONAL/PROFESSIONAL SERVICES AGREEMENT

This AGREEMENT is by and between Clatsop County ("County") and Talbot, Korvola, & Warwick, LLP ("Contractor"). Whereas County has need of the services which Contractor has agreed to provide; NOW THEREFORE, in consideration of the sum not to exceed $**35,050** to be paid to Contractor by County, Contractor agrees to perform between date of execution and **June 30, 2017**, inclusive, the following specific personal and/or professional services:

Please see attached Exhibit A.

Payment Terms: **Monthly invoices as approved by county. The contractor is not authorized to incur additional expenses outside the scope of work without prior approval from the county.**

1. **COMPLETE AGREEMENT.** This Agreement contains the entire understanding of the parties and supersedes all prior agreements, oral or written, and all other communication between the parties relating to the subject matter of this Agreement.
2. **WRITTEN NOTICE.** Any notice of termination or other communication having a material effect on this Agreement shall be served by U.S. Mail on the signatories listed.
3. **GOVERNING LAW/VENUE.** This Agreement shall be governed by the laws of the State of Oregon. Any action commenced in connection with this Agreement shall be in the Circuit Court of Clatsop County. The prevailing party shall be entitled to reasonable attorney fees and costs, including an appeal. All rights and remedies of County shall be cumulative and may be exercised successively or concurrently. The foregoing is without limitation to or waiver of any other rights or remedies of County according to law.
4. **COMPLIANCE.** Contractor shall comply with all applicable Federal, State, and local laws, rules and regulations. All provisions of ORS 279B.220-235 (Public Contracts and Purchasing) are incorporated herein to the extent applicable to personal/professional service agreements. Specifically, Contractor shall:
   a. Promptly pay, as due, all persons supplying labor and material for the prosecution of the work provided of in such contract. If Contractor fails to pay any such claim, County may pay the claim and charge the payment against the funds due Contractor, pursuant to ORS 279B.220;

b. Pay any required contributions due the Industrial Accident Fund incurred in the performance of the contract;

c. Not permit any lien or claim to be filed or prosecuted against County, on account of any labor or material furnished by Contractor;

d. Pay the Department of Revenue all sums withheld from employees pursuant to ORS 316.167;.

e. Not employ any person more than 10 hours a day, or 40 hours a week, unless permitted under ORS 279B.235, and any employee working over 40 hours per week shall be paid overtime as provided in ORS 279B.235.

f. Pay promptly, as due, any payment for medical surgical or hospital care furnished to employees of Contractor, pursuant to ORS 279B.230.

g. If Contractor is a subject employer, Contractor will comply with ORS 656.017.

5. **JUDICIAL RULINGS.** If any provision of this-as applied to either party or to any circumstances shall be adjudged by a court to be void or unenforceable, the same shall in no way affect any other provision of this Agreement or the validity of enforceability of the Agreement.

6. **INDEPENDENT CONTRACTOR.** Contractor, in carrying out the services to be provided under this Agreement, is acting as an "independent contractor" and is not an employee of County, and as such accepts full responsibility for taxes or other obligations associated with payment for services under this Agreement. As an "independent contractor", Contractor will not receive any benefits normally accruing to County employees unless required by applicable law. Furthermore, Contractor is free to contract with other parties, on other matters, for the duration of this Agreement.

7. **INDEMNIFICATION.** Contractor shall save harmless, indemnify, and defend County for any and all claims, damages, losses and expenses including but not limited to reasonable attorney's fees arising out of or resulting from Contractor's performance of or failure to perform the obligations of this Agreement to the extent same are caused by the negligence or misconduct of Contractor or its employees or agents.

8. **INSURANCE.** Contractor shall purchase and maintain at Contractor's expense, Comprehensive General Liability, Automobile Liability, and Professional Liability insurance. This insurance is to provide separate coverage for each of the required types of insurance at a minimum of $600,000 for property damage and minimum of $700,000 per person for bodily injury and no less than $1,400,000 for each occurrence. In addition, all such insurance, with the exception of Professional Liability, shall name County, its Commissioners, employees and agents, as an **Additional Insured.** A copy of the policy or certificate of insurance acceptable to County shall be submitted to County. Some, or all, of the required insurance may be waived or modified if approved by County's counsel as follows:

_____

_____(approved by County Counsel)_____(Contractor's Initials)_____

9. **WORKER'S COMPENSATION.** Contractor shall comply with ORS 656.017 for all employees who work in the State of Oregon. If Contractor hires employees, he or she shall provide County with certification of Worker's Compensation Insurance, with employer's liability in the minimum of $100,000.

10. **NONDISCRIMINATION.** No person shall be subjected to discrimination in receipt of the benefits of any services or activities made possible by or resulting from this Agreement on the grounds of sex, race, color, creed, marital status, age or national origin. Any violation of this provision shall be considered a material violation of this Agreement and shall be grounds for cancellation, termination or suspension in whole or in part by County.

11. **TERMINATION OF AGREEMENT.** This Agreement may be terminated under the following conditions:

a. By written mutual agreement of both parties. Termination under this provision may be immediate.

b. Upon fifteen (15) calendar days written notice by either Party to the other of intent to terminate.

c. Immediately on breach of the contract.

12. **SUBCONTRACTING/NONASSIGNMENT.** No portion of this Agreement may be contracted to

assigned to any other individual, firm, or entity without the express and prior approval of County.

13. SURVIVAL. The terms, conditions, representations and all warranties contained in this Agreement shall survive the termination or expiration of this Agreement.

14. FUNDING. In the event the Board of Commissioners of County reduces, changes, eliminates, or otherwise modifies the funding for any of the services identified, Contractor agrees to abide by any such decision including termination of service.

15. STANDARD OF SERVICES AND WARRANTY. Contractor agrees to perform its services with that standard of care, skill and diligence normally provided by a professional individual in the performance of similar services. It is understood that Contractor must perform the services based in part on information furnished by County and that Contractor shall be entitled to rely on such information. However, Contractor is given notice that County will be relying on the accuracy, competence and completeness of Contractor's services in utilizing the results of such services. Contractor warrants that the recommendations, guidance and performance of any person assigned under this Agreement shall be in accordance with professional standards and the requirements of this Agreement.

16. COUNTY PRIORITIES. Contractor shall comply promptly with any requests by County relating to the emphasis or relative emphasis to be placed on various aspects of the work or to such other matters pertaining to said work.

17. OWNERSHIP AND USE OF DOCUMENTS. All documents, or other material submitted to County by Contractor shall become the sole and exclusive property of County. All material prepared by Contractor under this Agreement may be subject to Oregon's Public Records Laws.

18. TAX COMPLIANCE CERTIFICATION. Contractor hereby certifies, under penalty of perjury, as provided in ORS 305.385(6), that to the best of Contractor's knowledge, Contractor is not in violation of any of the tax laws of this state or political subdivision of this state, including but not limited to ORS 305.380(4), 305.620 and ORS chapters 316, 317 and 318. Contractor represents that Contract will continue to comply with the tax laws of this state and any applicable political subdivision of this state during the term of the public contract. If Contractor's fails to comply with the tax laws of this state or a political subdivision of this during the term of this agreement, the Contractor shall be in default and County may terminate this agreement and pursue its remedies under the agreement and under applicable law.

This Agreement will not be effective until approved by the authorized signatory for County.

FOR COUNTY:

Signature Date

Title

FOR CONTRACTOR:

Signature 11/14-2016 Date

Partner
Title

4800 Meadows Rd, Suite 200
Address

Lake Oswego OR 97035
City State Zip

Agenda Item # 6-i

Board of Commissioners
Clatsop County

AGENDA ITEM SUMMARY

December 14, 2016

Issue/Agenda Title: Purchase of Kenworth Dump Truck

Category: Consent Calendar

Prepared By: Ted McLean, Assistant Public Works Director

Presented By: Michael Summers, Public Works Director

Issue before the Commission: Approve purchase of 2018 Kenworth Chassis with PTW Truck Body Dump Box from PAPE Kenworth

Informational Summary: The Public Works Department has budgeted $380,000.00 for the purchase of Equipment.

This new Kenworth 12 yard Dump Truck will replace #267 Peterbilt Dump Truck. The existing truck is a 2005 model used primarily for transporting materials all year around including plowing and sanding roads in the Jewell area. It has over 8000 hrs on it and getting close to the stage of rebuild. Instead of rebuilding it we have chosen to trade it in for the new model that meets the new emission standards. This model will also have the new automatic transmission which will improve fuel economy and longevity.

Purchase price $182,730.00, trade in #267 Dump Truck-$64,350.00- **Total price $118,380.00**

The Public Works Department has made comparisons with several different truck Mfg., Kenworth, Peterbilt and Volvo, Mack. (Our large truck fleet currently is Peterbilt)

We have chosen the Kenworth for several reasons:

#1- Peterbilt cannot supply a warrantied frame extension for plowing.

#2- Kenworth and Peterbilt share many of the same parts and supplies that are currently stocked by our shops. Other Truck Mfg's supply different engines and transmissions as well as suspensions that would require more training for our shop as well as storage of supplies.

#3- Kenworth was a little more cost initially but they gave us better trading values for the overall lowest bid price.

#4 Kenworth gives us the best severe duty cab and chassis for on and off road use and longevity.

PAPE Kenworth is using a nationwide contract called NJPA. This contract has been advertised in Oregon and complies with the State of Oregon purchasing requirements.

Fiscal Impact: This purchase was budgeted in the Roads Equipment Replacement Fund.

Options to Consider:

1. Approve purchase of the 2018 Kenworth Hook Dump Truck
2. Look for other truck options
3. Keep fleet as is

Staff Recommendation: Option #1

Recommended Motion: *"I move to approve the purchase of the 2018 Kenworth Dump Truck from PAPE Kenworth and to declare surplus #267 Peterbilt Dump Truck.*

Attachment List:

A- 2018 Kenworth Dump Truck Specs

B- NJPA contract number 081716-KTG and reference materials

PAPÉ KENWORTH

KENWORTH

CUSTOMER TRUCK SALES ORDER

SIC Code:

INVOICE ADDRESS	Buyer Name Clatsop County Roads	DELIVERY ADDRESS	Name
Address 1100 Olney Ave		Address	
City Astoria	State OR Zip 97103	City	State Zip
Phone 503-325-9312	Fax	Phone	Fax
PO No.	Delivery/F.O.B. Customer	Est. Delivery Date March 2017	

EQUIPMENT	Yr/Make 2018 Kenworth	Mileage	NEW	USED
	Model T800	VIN No.	☑	☐

Description:			$125,072.00
T800 Dump Truck Chassis			
NJPA Contract# 081716-KTG			
☐ See attached Kenworth Vehicle Summary or Addendum			
Additional Equipment/Accessories	Cost		
Sourced goods include the following	$57,658.00	Add'l Equipment Sales Price	$57,658.00
PTW Dump Body		Transportation Charges	
Henke 11' Plow		Federal Excise Tax	
		State Sales Tax %	$0.00
TRADE — Yr/Make 2005 Peterbilt	☐ See attached Addendum	Misc. Document/License Fee	
Model 357		Less Net Trade-In Allowance	$64,350.00
VIN No. SD845836		Total Differential Price	$118,380.00
Lienholder N/A	Mileage 127795	Less Deposit with Order	
Trade In Allowance $64,350.00	Less (Est.) Payoff $0.00	Balance Due on Delivery	$118,380.00

* The Sales Price shown in this order will be adjusted by the same increase or decrease as any increase or decrease in Dealer's factory list prices and any increase or decrease in transportation costs between today's date and the date of delivery.

WARRANTY	
☑	NEW STANDARD KENWORTH CHASSIS
☐	VENDOR NEW EXTENDED (describe)
☐	VENDOR NEW EXTENDED (describe)
☐	USED (describe)
☐	AS IS / NO WARRANTY — Buyer Initial: _____

A heavy-duty tractor and 53-foot or longer box-type trailer operated in California may be subject to the California Air Resources Board Heavy-Duty Vehicle Greenhouse Gas Emission Reduction measure. These vehicles may be required to use low-rolling resistance tires and meet aerodynamic equipment requirements to reduce greenhouse gas emissions. For more information, please visit the California Air Resources Board website at http://www.arb.ca.gov/cc/hdghg/hdghg.htm.

If trade-in, Buyer certifies that there is no lien of any kind and that the Trade is free and clear and is his sole and absolute property except as noted above. The undersigned Buyer places a firm order.

PAPÉ KENWORTH	BUYER
Store Pape Kenworth	
City Portland State OR Zip 97211	By _____ Title _____
By Scott Sauer Title Territory Manager	By _____ Title _____
Date 11-29-2016	Date

KENWORTH

Pape Kenworth P255 **550 NE COLUMBIA BLVD**	**Clatsop County Roads** **1100 Olney Ave**
PORTLAND, Oregon United States 97211 **Phone: (503) 240-6282** **Fax: (503) 345-6853** **Email:**	**Astoria, Oregon United States 97103** **Phone: (503) 325-9312** **Fax:** **Contact Email:** **Prepared for: ted**

Vehicle Summary

Unit

Model:	T800 Series Conventional.
Type:	FULL TRUCK
Description:	2018 T800

Application

Intended Serv.:	Snowplow. Vehicles which are configured for
Commodity:	Gravel/crushed rock/sand

Body

Type:	End dump
Length (ft):	16.0
Height (ft):	13.5
Max Laden Weight (lbs):	4000

Trailer

No. of Trailer Axles:	0
Type:	
Length (ft):	0.0
Height (ft):	0.0
Kingpin Inset (in):	0
Corner Radius (in):	0

Restrictions

Length (ft):	120
Width (in):	102
Height (ft):	13.5

Chassis

Fr Axle Load (lbs):	20000
Rr Axle Load (lbs)	46000
G.C.W. (lbs):	80000
Road Conditions:	
Class A (Highway)	90
Class B (Hwy/Mtn)	08
Class C (Off-Hwy)	02
Class D (Off-Road)	00
Maximum Grade:	6
Wheelbase (in):	214
Overhang (in):	65
Fr Axle to BOC (in):	74
Cab to Axle (in):	140
Cab to EOF (in):	205
Overall Comb. Length (in):	346

Special Req.

U.S. Domestic Registry, 50-State

Approved by: _____ **Date:** _____

Note: All sales are F.O.B. designated plant of manufacture.

	Ask your dealer for a quote today, or visit our website @ www.paccarfinancial.com. PACCAR Financial offers innovative finance, lease and insurance programs customized to meet your needs.

Unpublished options may require review/approval.
Dimensional and performance data for unpublished options may vary from that displayed in PROSPECTOR.

Printed:	11/15/2016 7:58:02 AM	***Complete***	Model Number:	T800 Series Conventional.
Effective Date:	Jan 1, 2016		Quote/DTPO/CO:	Q15725153
Prepared by:	SCOTT SAUER		Version Number:	37.20

KENWORTH

Pape Kenworth P255 **550 NE COLUMBIA BLVD**	**Clatsop County Roads** **1100 Olney Ave**
PORTLAND, Oregon United States 97211 **Phone: (503) 240-6282** **Fax: (503) 345-6853** **Email:**	**Astoria, Oregon United States 97103** **Phone: (503) 325-9312** **Fax:** **Contact Email:** **Prepared for: ted**

	Description	Weight
Model		
	T800 Series Conventional. Elastomer bushed front spring pins & heavy-duty shock absorber brackets, 16mm. fasteners from rear cab support to end-of-frame, except tractor taper crossmember. Vinyl inside sunvisors, driver side includes strap & mirror, rider side includes strap; Under-dash center console w/ 2 cup holders, 2-12V outlets & a storage compartment, Glove box door with locking latch.	15,309
	T800: Sloped Hood.	0
	Chassis operation will not include a stationary application. Stationary operation is defined as running the engine under load while stationary at a substantial fraction of engine gross horsepower (60% or greater) for an extended period of time (longer than 5 - 10 minutes).	0
	CARB Idle Emissions Reduction Feature. Paccar MX engines - Low NOx Idle.	0
	Non-Sleeper w/rear axle capacity less than 59K.	0
	Gravel/crushed rock/sand	0
	Snowplow. Vehicles which are configured for mounting a snowplow to the front. May also have dump or other body. Typically includes some operation off of paved roads. Road usage: majority of Class A & B, do not code for Class D.	0
	End dump	0
	U.S. Domestic Registry, 50-State	0
Engine & Equipment		
	PACCAR MX-13 485 2013+ 485@1700 1650@1000 with engine brake. N08000 N219 0....Offset mode N08030 N224 2....Maximum Vehicle Speed Bonus N08040 N227 -2...Maximum Vehicle Speed Penalty N08190 N246 4....Minimum Vehicle Speed for DSA Activation N08200 N247 1....Lowest Gear that DSA will be active N08210 N248 18...Highest Gear that DSA will be active N09020 N170 120..Standard Maximum Speed Limit [LSL] N09030 N169 0....VSL Expiration Distance N09040 N162 64...Maximum Accelerator Pedal Vehicle Speed N09060 N163 0....Maximum Cycle Distance N09070 N052 650..Engine Idle Speed N09100 N015 NO...Enable Retarder During Manual Transmission Gear Selection N09110 N019 0....Delay in Engine Brake Activation w/ Brake Pedal Depressed N09120 N014 2....Auto Retard Vehicle Speed Offset N09130 N013 4....Downhill Speed Limiter Vehicle Speed Offset N09140 N006 64...Max Cruise Speed N09150 N001 16...Minimum Speed to Turn Cruise Control Off	0

N09160 N003 19...Minimum Cruise Control Speed
N09170 N002 19...Min Speed to Automatically Turn Cruise Control On
N09200 N039 OFF..Allow Multi-Torque Only When Cruise is Active
N09210 N193 0....EIST Expiration Distance
N09220 N188 5....Timer Setting Non-PTO Mode w/o Park Brake Set
N09230 N187 5....Timer Setting Non-PTO Mode w/ Park Brake Set
N09250 N190 YES..Reset EIST Timer Based on Engine Load
N09260 N191 NO...Overrule EIST Timer Based on Engine Load - No Shutdown
N09280 N186 5....Timer Setting When in PTO Mode
N09290 N200 YES..Allow EIST Timer Overrules in PTO Mode
N09300 N185 40...Low Ambient Temperature Overrule
N09310 N184 80...High Ambient Temperature Overrule
N09350 N197 YES..Enable Accelerator Pedal Reset
N09360 N199 YES..Enable Clutch Pedal Reset
N09370 N198 YES..Enable Service Brake Reset
N09380 N071 ON...FIC Enable/Disable
N09390 N072 1900.Maximum Fast Idle Control Engine Speed
N09440 N080 1....PTO Vehicle Speed Limit
N09450 N078 ON...PTO Mode Disabled w/ Clutch Pedal Depressed
N09460 N101 ON...PTO Mode Disabled w/ Service Brake Depressed
N09470 N079 ON...PTO Mode Enable Only w/ Parking Brake Set
N09480 N089 ON...PTO Mode Enable Only w/ Transmission Neutral
N09530 N110 ON...Enable Set Point w/ Set/Accel Switch Bump
N09540 N087 780..RPM Set Point
N09550 N086 2000.Maximum Engine Speed During PTO Operation
N09600 N106 660..Minimum Engine Speed During PTO Operation
N09640 N173 0....Reserve Speed Offset
N09840 N179 YES..Enable Park Brake Reset
N09880 N164 252..Reserve Speed Function Reset Distance
N09900 N182 30...Coolant Temperature Overrule
N09920 N073 Trq..Cab Accel Pedal Type in PTO Mode
N09940 N055 780..RPM Set Point 1
N09960 N056 1030.RPM Set Point 2

Prospector Version 38.2 Replaces version 38.1	0
Engine monitoring protection -Derate- PACCAR MX engine parameter.	0
PTO Speed control from cab station w/ acc- elerator pedal, PACCAR MX engine parameter.	0
Gearing Analysis: Performance power before economy results.	0
Customer's Typical Operating Spd: 60 MPH.	0
MX Retarder State Cruise Control On Latch Mode Selecting this code will program the engine controller to make latch mode available when cruise control is on, but not set, and the engine brake switch is on. Latch mode means the engine retarder is activated when the brake pedal is depressed and does not deactivate until the operator depresses the accelerator pedal. This sales code cannot be selected if either Code 5 or Code 6 are selected. 2013+	0
Enable MX Retarder Auto-Retard Selecting this code will program the engine to utilize the auto retard mode whenever cruise control speed has been set and the engine brake switch is on. The auto-retard mode will control the vehicle speed to an offset from the cruise control set speed via the engine retarder. The offset speed shall be dependent upon customer inputs via the electronic programming work screen. 2013+	0
Effective VSL Setting NA	0
Engine Idle Shutdown Timer Enabled	0
Enable EIST Ambient Temp Overrule	0
Eff EIST NA Expiration Miles Use only with MX and Cummins engines	0
Air compressor: WABCO 28 CFM PACCAR MX.	0

Air cleaner: Powercore engine mount 10 in. w/constant torque SS clamps, pop-up air restriction indicator. Holds 10% more fine dust than 2500. Pop-up indicator is standard.	0
Filter minder air restriction indicator mounted on air cleaner replacing standard pop-up indicator.	0
Fan hub: Horton 2-Speed for PACCAR MX	0
Cooling module: T8SH/T8B/W9S 1440 square inches. Clog resistant. Includes aluminum radiator core, aluminum charge air cooler, translucent surge tank and washer bottle, silicone hoses, and extended life coolant. Drain valve is not available w/Allison transmissions.	0
RH under cab DPF/SCR w/ RH SOC vertical tailpipe. For use w/ daycabs, extended daycabs, or modular sleepers. T660 requires split fender hood.	0
Tailpipe: 5 in. single 24 in. 45 degree curved.	-3
Davco 382 Fuel filter/Water separator w/120V pre-heat, heated w/integral thermostat, EPA13 MX or Export engines	15
Immersion block heater 120V 1500W w/plug under door on C500, T660, T800 & W900.	2
Fuel tank heater: single Arctic Fox w/thermostat.	6
Alternator: 160 amp brushless with battery voltage sense. *This code replaced 1812160.	9
Batteries: 3 Optima 31A Threaded post (900) 2700 CCA.	3
Starter: PACCAR 12 volt electrical system. W/ centralized power distribution incorporating plug-in style relays. Circuit protection for serviceability, 12-volt light system w/circuit protection circuits number & color coded.	0
Multi-function engine connector for body builder interface PACCAR MX engine only. T680/T880: This feature is standard, no code required.	0
Connection between PTO switch & engine requires code 1900082 or 1900084. T680/T880: This feature is standard, no code required.	0
Steel front engine supports.	15
Jump start terminals under hood.	12
Body Builder Control Harness coiled BOC/BOS for customer-installed remote throttle and remote PTO controls. Harness includes Remote PTO control and Remote Throttle controls. T680/T880 models do not require 12-way engine connector sales codes. All other models require (1900082 or 1900084).	0

Transmission & Clutch

Transmission: Eaton FO16E318B-MXP UltraShift Plus 18-speed w/Hill Start Aid feature. Standard with synthetic lubricant. This product should be used for heavy loads operating primarily on highway. C500, T660, T800 & W900 models utilize a cobrahead shift lever. *Torque Limit: 1650 pound-feet.	179
Clutch:UltraShift Plus OR Fuller Advantage Series Automated transmissions.	0
Driveline: 2 Dana SPL250XL 1 centerbearing requires 3500057 interaxle driveline. Low maintenance offering from Spicer. On-highway 350K mi first service interval, 100K mi subsequent service interval on U-joint, splines lubed for life for life, quick disconnect end caps.	95
Extend underbell housing bracket F/PTO output Flange clearance.	0
Chassis will be fitted w/LH transmission PTO. (PREVENTS ECU F/INTERFERING W/PTO ONLY)	0
14 in. Eaton Fuller high capacity oil to water cooler standard for transmission 1550-2250 lb-ft, 18-speed AutoShift.	0

Front Axle & Equipment

Dana Spicer D2000 Front Axle rated 20K standard track.	120
Front Brakes: 22K Bendix ES S-cam 16.5x6 in.	-46
Front dustshield: for drum brakes: all front axles.	6
Front Brake Drum: 22,000 lbs. 16-1/2x6 in. Cast.	104
Front Hubs Iron hub pilot 20,000 lbs. 10 Bolt 16.5x6in. or 7in. or air disc brakes. 10 Bolt, 11-1/4 in. bolt circle. Consider Wheelguards (5850002) with aluminum wheels.	80
ConMet PreSet Plus Hub package; front axle.	0
Hubcap: front vented.	0
Front Auto Slack Adjuster.	0
Front Springs: Taperleaf 20K w/ shock absorbers w/ maintenance-free elastomer spring pin bushings. Standard with rubber pins except for C500 which has threaded pins. W900S only. Not available on W900L. W900B use 2866021.	241
Dual power steering gears: 20K Sheppard M100P.	70
Power Steering Cooler:Radiator Mounted Air-to-Oil 2007 and later engines only.	11
Threaded Bushings for taperleaf spring 16K, 18/20K, 22K, 40K replacing rubber.	0

Rear Axle & Equipment

Dual Dana Spicer D46-170HP rear axle rated at 46K. w/ 16mm housing and 2.06in. shaft diameter. Includes pump. Tandem rear axles.	582
Rear Axle Ratio - 4.30.	0
Dual Rear Brakes 16-1/2x7 in. to 46K; Bendix ES-extended service S-cam.	0
Dual Rear Brake Drums: cast.	0
Dual Rear Hubs: Aluminum hub pilot 46K 11-1/4 in. bolt circle.	0
ConMet PreSet Plus Hub package; dual rear axle.	0
Dual Rear axle automatic slack adjusters.	0
Spring Brake: 3030 long stroke dual 30 square inches travel; replaces standard 2-1/2 in. travel. Helps keep brakes in adjustment longer.	4
Dustshields for drum brakes: all rear axles.	11
Bendix 6S/6M anti-lock brake system w/ air traction control (ATC).	6
Interaxle driveline 1 Dana SPL170XL	-4
Wheel Differential Lock for Dana Spicer axles D40-170(P)/D46-170(H)(P)(WT) forward rear axle & rear rear axle.	112
Separate flip valve for dual axles: differential lock or crosslock.	0
Tandem Hendrickson HAULMAAX (HMX) 460 46K. 54 in. axle spacing. With shocks, track rods, rubber bolster bushings and 16.5 in. saddle height. Unladen Height: 10.6 in. Laden Height: 9.5 in.	61
1 Steerable Pusher Watson-Chalin Tru Track 13.5K SL1190SSR Alumilite; includes axle.	1,271
1 Steerable Pusher Brakes: Bendix Non-RSD 15x4 Use with 13.5Kaxle.	0
1 Steerable Pusher brake drum 15x4 for use with 13.5K axle.	0
1 Steerable pusher hubs aluminum hub pilot for use with 13.5K axle.	0
Steerable pusher: optional dustshields.	6

	Pusher or Tag: gauge/flip valve dash-mounted; gauge and pressure regulator mounted BOC(S) lower LH side.	0
	1st Pusher location: 64 in. from c/l forward tandem axle or single rear axle.	0
Tires & Wheels		
	Front tires: Michelin XFE 425/65R22.5 20PR. 20.6 in. SLR.	170
	Rear tires: Michelin XWORKS XDY 11R24.5 16PR 44 in. diameter, drive. 20.7 in. SLR. Code is priced per pair of tires	304
	1 steerable pusher:2 Michelin XZE 255/70R22.5 16PR. 36.7 in. diameter, all position. AKA PXZE. 17.2 in. SLR.	-40
	Rear Tire Quantity: 8	0
	Front wheel: Alcoa 82462 22.5x12.25 aluminum, with Lvl One [TM] finish, hub pilot mount. 11000lb. maximum rating. 5.80 in. offset. Air disc brake compatible.	-3
	Rear wheel: Alcoa 98565 24.5x8.25 aluminum, with Lvl One [TM] finish, hub pilot mount. 8000lb. maximum rating. Severe service. Code is priced per pair of wheels. Air disc brake compatible.	-48
	1 steerable pusher wheel: 2 Alcoa 88367 22.5X8.25; aluminum with Lvl One [TM] finish. Hub pilot mount. 7400lb. maximum rating.	-44
	Rear Wheel/Rim Quantity: 8	0
Frame & Equipment		
	Extended Frame Rails: 10-3/4 x 3-1/2 x 3/8 in. Steel 337 in. to 480 in. Truck frame weight is 3.48 lb.-in. per pair of rails. Section modulus is 17.80, RBM is 2,132,000 in-lbs per rail. Frame rail availability may be restricted based upon application, axle/suspension capacity, fifth wheel setting, or component/dimensional specifications. The results of the engineering review may result in a change to the requested frame rail. If a change is required Kenworth Application Engineering will advise the dealer of the appropriate material specification for a substitute rail.	454
	Bumper: Straight steel, painted channel. Requires a bumper setting code.	50
	66 in. Bumper setting. Requires a bumper code.	0
	Rectangular bumper cutouts for customer-installed fog lights.	0
	Mudflaps, Front: Extra wide for use w/ tires that are wide base singles.	6
	Custom Frame Layout: one chassis	0
	In-cab steel battery box: under rider seat or in stand alone box. Requires appropriate AGM battery code, which varies by model, and appropriate rider seat code be selected prior to entering the workscreen. Includes 1 battery disconnect switch.	-9
	In-Cab battery box location: Under rider seat.	0
	T470,C5, T6, T8 non-polished DPF/SCR or CNG cover diamond plate w/ step. For use w/ 2010 or later exhaust systems. For T8, use extended length non-polished battery box on opposite rail to match the length of under cab components.	30
	C500,T800 twin steer, non-polished DPF/SCR cover. No cab access, no step.	0
	Heavy-duty BOC crossmember assembly.	23
	Rear mudflap arms: Betts B-25 standard-duty, straight. Includes B1732 mounting brackets as standard.	0
	Rear mudflap shields: White plastic antisail w/ Kenworth logo.	0
	Square end-of-frame w/ o crossmember;non-towing.	0

Fuel Tanks & Equip

	Fuel Tank: 100 US gallon 24.5in. aluminum under replace. Class 8 fuel tanks w/ o locking caps include an anti-siphon device on the filler neck.	0
	Small round DEF tank. 11 gallons of useable volume. The DEF tank will be located on the side you specified. If you have specific configuration or body builder concerns, please utilize the Custom Frame Layout option. Standard capacity is calculated by fuel capacity of the vehicle and will accommodate two diesel fill-ups for every DEF fill-up. For 1:1 DEF fuel fill ratio, add 7889204.	0
	6in. wide lower fuel tank step, for one 22in. or 24.5in. tank LH.	2
	Polished cover for 1 DEF tank any size.	3
	Mechanical anti-roll channel for one tank.	6
	Standard DEF to fuel fill ratio: 2:1 or greater.	0
	Anti-siphon device swaged in place. For any number of fuel tanks.	0
	DEF tank location is on the RH.	0
	Location: 100 gal fuel tank LH under cab	0
Cab & Equipment		
	Cab: Curved Glass Conventional. Cab Includes aluminum & fiberglass fully hucked cab w/ all aluminum bulkhead doors & continuous stainless steel piano-style door hinges. Single electric horn standard. Incandescent exterior lights include diagnosable bulb detection and warning. Trailer cable on tractors includes integrity detection. Standard features include multiplex wiring for interior lights, automated pre-trip inspection, short and open check diagnostics. Warning alarm will sound when lights are left on.	0
	Cab door bearing blocks, top & bottom.	0
	T800 Straight unitglas hood w/ split fenders. Use w/ extended frame rails or FEPTO.	205
	Radiator Mounted Grille for use with C500 with 1780 Radiator, T800 FEPTO, or T800 Wide hood. This code is not applicable to sheet metal hoods. For C500 with 1430 or 1520 Radiator, or T800 standard sloped hood, see 8098421.	0
	Cab heater: W/integral defrosters & A/C 45,000 btu cab heater. No sleeper heater/AC. Includes 5 mode rotary control. T660 include filter media.	0
	Steering wheel: 18 in. 4-spoke.	0
	Adjustable telescoping tilt steering column.	10
	5 sets of keys. Replaces standard 2 sets of keys.	0
	Off-highway dash switch: For ABS system. Includes indicator light.	0
	Switch & Wiring for Customer-Installed PTO. Electric over hydraulic PTO. Includes switch guard. Wiring is routed to LH frame for connection to the customer installed PTO. No air controls are provided with this code.	0
	Three spare switches: Wired to power.	0
	Gauge: Engine Oil Temperature Gauge With Integral warning light. The NavPlus HD unit includes a virtual engine oil temperature gauge.	0
	Gauge: Fuel filter restriction gauge.	0
	Gauge: Manifold Pressure Gauge. The NavPlus HD unit includes a virtual manifold pressure gauge.	0
	Gauge: Axle oil temperature, dual-drive axle. (2 gauges) w/integral warning light.	0
	Gauge: Oil Temperature Gauge Transmission. The NavPlus HD unit includes a virtual transmission oil temperature gauge.	0

KW Driver Information Center: Includes fuel economy, RPM display, trip information, truck information, diagnostics, gear display, alarm clock.	0
Instrument package: Includes speedometer, tachometer, fuel gauge, engine coolant temperature gauge, engine oil pressure, voltmeter. Class 8 also includes primary & secondary air reservoir gauges & an air application gauge. DEF level gauge and warning lamp are included with 2010+ engines. Engine hour meter and outside air temperature readouts are standard. Primary read out will be MPH. Add 8240620 to switch primary scale to KPH in Canada.	0
Cab interior: Splendor. Includes smooth upholstered side & back panels w/stitched accent lines, upholstered door pads, full vinyl headliner, black dash panels & black rubber floormats.	0
Interior color: Slate Gray w/trim Dark Slate Gray	0
Driver seat: Kenworth Air cushion Plus IB Mordura Standard features includes 7 in. fore and aft slide adjustment w/isolator, 6-23 degree recline, air suspension with cover, dual armrests, and single chamber air lumbar support. Seat cushion is 20 inches wide w/ 2-position tilt and 2-position front cushion extension. Seat material has a horizontal stitch pattern and is 2-tone in color. Seat back is carpeted. Seat is manufactured by National. Includes inside visor and retractable 3-point matching seat belts. Grey seat belts.	-6
Rider seat: Kenworth Plus battery box IB Mordura. Standard features include fixed base and backrest, fixed seat base and backrest, and dual armrests. Seat cushion is 19.5 inches. Seat material has a horizontal stitch pattern and is 2-tone in color. Seat back is carpeted. Seat is manufactured by National. Includes inside visor and retractable 3-point matching seat belts. Grey seat belts.	-37
Seat color: Jet Black.	0
Air line fitting: At driver seat. Customer-installed air chuck.	4
Kenworth Radio with AM/FM/WB/USB and Bluetooth	4
CB Radio: Cobra 29. W/header mounted quick release. Includes transceiver & separate speaker remote-mounted in headliner & dual CB antennas. Includes sound tracker & illuminated panel.	11
Solid post antenna: Mounted on LH cowl. Replaces top-of-cab antenna. Recommended for dump trucks, loggers, & where overcab clearance is limited.	0
Additional accessory power supply wiring. In header.	0
Speakers: Four 4 in. x 6 in. high performance. Adds 2 speakers to the Panasonic standard 2. Located in cab header & rear cab corners.	0
Logbook holder under dash.	0
Under dash center console: Includes one cupholder & two 12V outlets. For use w/Autoshift, Ultrashift, & Allison Gen IV only.	0
Non-self cancelling turn signal: W/column-mounted headlight dimmer switch & intermittent wiper control.	0
Electric LH & RH door locks.	0
Kenworth TruckTech+ The Kenworth Remote Diagnostics system provides the Worlds Best reporting of engine and aftertreatment fault codes, as well as enhanced support for the truck owner through rapid communication of fault severity and recommended actions. This option is Standard on all Kenworths with an MX engine.	0
Long grabhandle RH side of cab.	0
Long grabhandle LH side of cab.	0
Grabhandle LH inside door frame above dash.	0
Grabhandle RH inside door frame above dash.	0
DAYLITE DOOR: LH/RH INCL RH PEEPER WINDOW	0
Single air horn under cab.	0

	Look-Down, Pass. Door, Stainless 8.5x4.4	0
	Dual convex heated mirror 8.5 inch w/ offset mounting below regular mirror.	11
	Mirror: Dual Moto heated mirrors 7 in. x 16 in. LH & RH remote controlled. Switch located on door pad.	0
	Mirror brackets 8-1/2 ft load width.	0
	Rear Cab Stationary Window 17 in. x 36 in.	0
	Electric-powered LH & RH door window lifts. Switch located on door.	0
	Fresnel lens for peeper window, RH door 10-1/8 in. X 11-1/8 in. Replaces standard peeper window.	0
	One-piece windshield, w/ curved glass.	0
	Exterior stainless steel sunvisor.	11
	4 1/2in. rubber wheelwell fender extension.	11
	Link Cabmate suspension.	22
	Quiet Cab Package: For Non-VIT Interiors. Includes Firewall Insulation & Floor Covering w/ Sound Deadening Materials and Cowl Blanket	77
Lights & Instruments		
	Headlamps: Dual Rectangular, extended life halogen	0
	Marker Lights: Five, rectangular, LED	0
	Turn Signal Lights: Mounted on fender	0
	LED Stop,Turn,Tail: With Two LED Backup Lights and With An LED License Plate.	0
	Turn Signal Lights: Rectangular mounted mirror bottom, in addition to standard.	2
	Customer-installed road/fog lights switch & wiring.	0
	Switch & Wiring for Customer-installed Floodlight w/o electrical pass-through - 1st set. Wire coiled BOC/BOS.	0
	Amber Beacon Lamp: Dual strobe, 12V centered over cab door w/ stainless steel brackets. SAE J1318 Class 2.	15
	Marker Lights: Interrupter Switch. Included in Turn Signal For All Models Except T3. The T3 Switch Is In The Dash.	0
	Switch & Wiring: For customer-installed plow light. Includes circuit breaker.	0
	LH & RH Courtesy Lamps: On upper skirt to light up steps.	0
	Wiring:Cust. Install Trlr Elec. Brake Controller. Class 8/T4 Content Includes Dash Signals: Ignition Power (20A), Ground, Stop Lamp and Electric Trailer Brake Controller Wired To EOF Junction Box. These Signals Are Located Near The NavPlus HD Area. No Need To Code For An Additional End of Frame Junction Box. EOF Junction Box Signals Are: Ground, Tail Lamp, Marker Lamp, Left Turn, Right Turn, Stop Lamp and Electric Trailer Brake Controller Wired To Dash. Medium Duty (not T4) Content Includes A MP 280 Series Connector In Dash Near Driver Door Connections With Signals: Battery Power (40A), Ground, Stop Lamp and Electric Trailer Brake Controller Wired To Chassis Connector. Medium Duty (not T4) 2 Way Deutsch Chassis Connector Located Near Back of Cab, With Signals: Ground and Electric Trailer Brake Controller Wired To Dash Connector.	4
	Circuit Breakers: Replacing fuses. Does not apply to any 5-amp fuse box position. Breakers include stop/brake/turn, tail lamp, high & low beams, marker/clearance lamps, horn, fuel heat, gauges, air dryer, HVAC controls, panel lamps. Some circuits will remain fuses.	0

Air Equipment

Air Dryer: Bendix AD-IS Extended Purge heated. with PuraGuard	4
Moisture ejection valve w/ pull cable drain.	0
Full truck kit: Gladhands mounted at end-of- frame.Seven-way female receptacle mounted at end-of-frame in taillamp bracket. Kit includes dash mounted trailer air supply valve, trailer hand control valve, and hoses/fittings for the valves. Dash mounted parking brake valve, tractor protection valve, and spring brake inversion/relay valves are standard.	15
Nylon air tubing in frame & cab, excluding hoses subject to excessive heat or flexing.	0
Bendix LQ-5 ratio valve:for Kenworth-installed pusher/tag. LQ-5 valve limits the amount of air applied to the pusher brakes. Helps prevent lockup in lightly loaded conditions.	2
Locate air dryer inside RH rail BOC. This code requires the use of a custom frame layout code.	0
Air tanks: clear of left side of transmission area. This code requires the use of a custom frame layout code.	0
Trailer ABS electric supply through SAE J560 7-pin connector per TMC RP137).	0

Extended Warranty

Standard Warranty.	0

Miscellaneous

GHG Secondary Manufacturer: Does Not Apply	0

Paint

Paint color number. N97020 A - L0754 ORANGE N97200 FRAME N0001 BLACK N97700 BUMPER L0754 ORANGE	0
Bumper Painted Color A	0
Day Cab Premium Paint	0
1 - Color Paint - Day Cab Color will be White if no other color is specified.	0
Base coat/clear coat. The Kenworth Color Selector contains additional instructions, as well as information on Kenworth paint guidelines and surface finish applications. Kenworth is standard with Dupont Imron Elite paint.	0

Total Weight 19546 lb

Prices and Specifications Subject to Change Without Notice.

Unpublished options may require review/approval.
Dimensional and performance data for unpublished options may vary from that displayed in PROSPECTOR.

Printed:	11/15/2016 7:58:02 AM	***Complete***	Model Number:	T800 Series Conventional.
Effective Date:	Jan 1, 2016		Quote/DTPO/CO:	Q15725153
Prepared by:	SCOTT SAUER		Version Number:	37.20

PIONEER TRUCKWELD

Customer: PAPE KENWORTH

Date: 11/10/2016

Job: CLATSOP COUNTY

BODY DESIGN:

- 15'- 6." "CUSTOM" DOUBLE WALL, BODY
- 12 YD CAPACITY
- 15' 6" (186") FLOOR, 85" INSIDE WIDTH, 97" OVERALL WIDTH
- ¼" AR-400 FLOOR
- 1/4"AR-400 TAILGATE. HYDRAULIC HI-LIFT, W/ HINGED APRON.
- SIDES AND DASH 3/16" AR-450
- 35" FORMED CONCAVE SIDES WITH FORMED AND FULL LENGTH REBAR TIE RAILS, WITH (4) "BANJO" LINKS (3/8" CHAIN) NEAR TOP RAIL PER SIDE.
- 8" x 4" X 3/16" RECTANGULAR TUBE LONGITUDINALS W/ CROSS-MEMBER BEHIND DOGHOUSE CUTOUT (33-½" OUTSIDE SPREAD)
- 10 GA A607-50 CORNER POSTS, W/ THREE SIDE FACING AND ONE REAR FACING "BANJO" LINKS
- TOP HINGED TAILGATE, WITH 1" 4140 REMOVABLE TOP PINS, TOP HINGE SHALL BE 1" ASTM 514. HINGES SHALL REST ON TOP POST. LIFTING EYE ON TOP OF GATE. (2) PATCH GATES.
- AIR TO AIR SINGLE, ACTING, SPRING RETURN, TAILGATE LATCHES.
- TRIP SHAFT (1 1/8" CR1018) AND LATCH LINKAGES ARE GREASEABLE.
- 6" 3-STAGE 160" STROKE (6.54-3004-160) SINGLE ACTING CYLINDER, NON-INVERTED TRUNION STYLE
- 10 GA STEEL 17" CABGUARD, WELDED IN PLACE
- THREE, 4" REAR FACING TAIL LIGHTS IN EACH CORNER POST, TOP REVERSE (CLEAR), MIDDLE TURN (AMBER), BOTTOM STOP (RED).
- ONE 2-1/2" MARKER LIGHT IN TOP OF EACH REAR CORNER POST MOUNTED AT 45°(RED), ONE 2-1/2" SIDE FACING MARKER LIGHT AT FRONT OF BODY (AMBER)
- ONE, REAR FACING ICC CLUSTER (THREE 2-1/2" RED), MOUNTED IN REAR BODY CROSS-MEMBER
- ONE, GIMBAL MOUNTED, AMBER STROBE LIGHT MOUNTED TOP CENTER OF CABGUARD
- DUAL BODY PROPS, ONE ON EACH SIDE OF BODY WITH STEEL, FRAME MOUNTED, SUPPORT
- STEPS EACH SIDE, MOUNTED AT FRONT CORNER OF BODY
- DASH MOUNTED SIGN AND SHOVEL HOLDER MOUNTED ON ROAD SIDE
- ALL WIRING TO BE SEALED AND RETAINED TO BODY USING WIRE CLIPS (NO CONDUIT)

TRUCK CHASSIS:

- STEEL QUICK HITCH SNOW PLOW BUMPER MOUNTED ON TRUCK FRONT FRAME EXTENSIONS, W/ FILLER PIECE BETWEEN BUMPER AND GRILL, AND INTEGRAL CHOCK BLOCK HOLDERS (DRAWING #SB120E)

PTW
PIONEER TRUCKWELD

Customer: PAPE KENWORTH

Date: 11/10/2016

Job: CLATSOP COUNTY

- REAR HITCH W/ INTEGRAL BODY HINGE MOUNTED AT REAR OF TRUCK, 2200A PINTLE HOOK MOUNTED IN "TOP" SET OF HOLES IN HITCH BUCK PLATE, GLAD HANDS MOUNTED IN CENTER OF HINGE, SAE STANDARD ELECTRICAL PLUG MOUNTED IN REAR HINGE, LICENSE PLATE LIGHT
- REAR HINGES, 1 ¾" CHROME MOLY, GREASELESS.
- HOIST BASKET MOUNTED TO TRUCK FRAME TO ACCEPT TRUNION CYLINDER
- HYDRAULIC PLUMBING MUST BE SUPPORTED AND PROTECTED FROM RUBS AND WEAR, FULL LENGTH OF TRUCK CHASSIS
- BODY LIMITING PROXIMITY SWITCH NEAR HOIST CYLINDER
- ALL WIRING EXTERNAL OF CAB MUST BE SEALED FROM MOISTURE AND WRAPPED IN PROTECTIVE COVERING
- GROUND CONTROL ASSEMBLIES DIRECT TO BATTERY
- REAR MUDFLAPS ON CLEVIS SWIVEL BRACKETS,
    - MUDFLAPS CAN BE **NO HIGHER THAN 10"** OFF THE GROUND

HYDRAULICS

- TRANSMISSION MOUNTED HOT SHIFT PTO
- CONTROL VALVE- S/A HOIST, S/A PUP, PLOW UP/DOWN/FLOAT, SANDER, AUGER, S/A HI-LIFT.
- AIR CONSOLE WITH SWIYCHES MOUNTED BETWEEN SEATS.
- BEHIND CAB HYDRAULIC TANK W/ FILTER.

PAINT

- **SANDBLASTED AND PAINTED COUNTY COLORS.**

Pioneer Truckweld Inc.

PIONEER TRUCKWELD INC.

Quotation

Quote To: PAPE KENWORTH
550 NE COLUMBIA BLVD
PORTLAND, OR 97211

Quote Number:	10403		**Contact:**	SCOTT
Quote Date:	11/10/16	**Expires:** 12/10/16	**Inquiry:**	
Customer:	PAPE KW		**Terms:**	Net 30 Days 1.5% Late Fee
Salesman:	UNKNOWN....		**Phone:**	(503) 240-6282
Ship Via:	Will Call		**FAX:**	
			Delivery:	TBD

CLATSOP COUNTY.

Item	Part Number / Description	Revision	Quantity	Price
1	DTSSH PIONEER DOUBLE WALL BODY, CHASSIS COMPONENTS, HYDRAULICS, PER COUNTY SPEC.		1	$42,479.0000 /EA
2	HENKE 11' PLOW Henke 11' plow 30-47-11IS, External Compression Trip Spring, Universal pin hitch, Steel cutting edge, 18" Rubber Shield, 11" Mushroom Shoes.		1	$12,329.0000 /EA
			Total:	***$54,808.00***

By Douglas D. Drader
Pioneer Truckweld Inc.

HENKE ONE-WAY FIXED-ANGLE SNOWPLOW

HENKE MODEL: 30-47 OWFA & 39-52 OWFA

For Medium to Heavy Duty Trucks

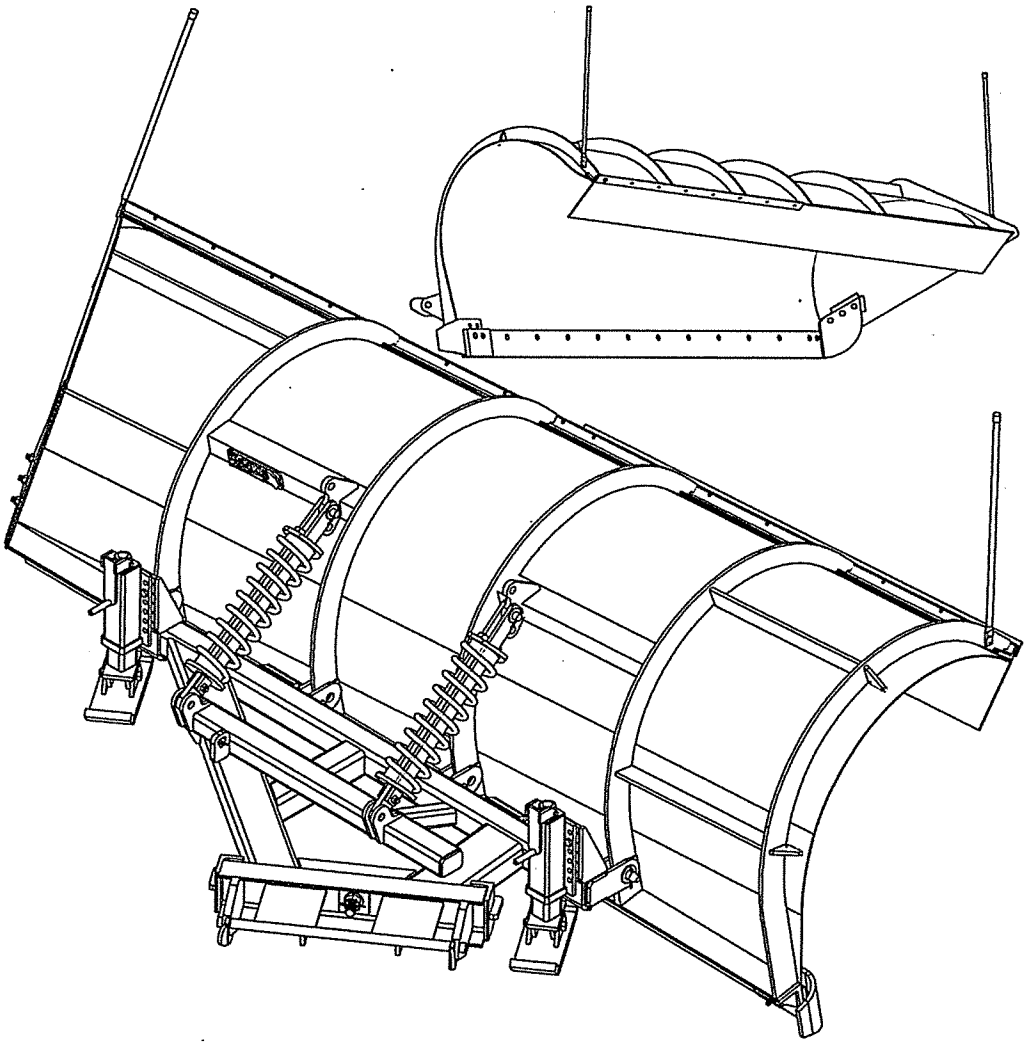

PARTS BOOK AND INSTALLATION MANUAL
VERSION 1.3, MARCH 2015

SERIAL NUMBER: _____

HENKE MANUFACTURING CORPORATION
MANUFACTURERS OF SNOW REMOVAL EQUIPMENT FOR 95 YEARS
3070 WILSON AVE. LEAVENWORTH, KS 66048 PHONE(913)682-9000 FAX(913)682-0300
WEBSITE ADDRESS : **WWW.HENKEMFG.COM** EMAIL: **PARTS@HENKEMFG.COM**

<<THIS PAGE IS INTENTIONALLY LEFT BLANK>>

Introduction

Thank you for your purchase of a Henke One-Way Fixed Angle Snow Plow. The One-Way plow is designed for drive speed snow removal and features triple-reinforced discharge ends, heavy-duty stabilizer bar, and an efficient moldboard tripping mechanism. The One-Way is designed to withstand years of rugged use.

The parts list for the One-Way snow plow is listed in Table 1. This list is important and should be referred to when ordering replacement parts from your local dealer or Henke Manufacturing Corporation. The parts diagram for the One-Way snow plow is shown in Figure 1.

This Product Manual should be read in its entirety before using your Henke One-Way Fixed Angle snow plow. For customer service, replacement parts, or answers to questions about your Henke plow, please call Henke Manufacturing at (913) 682-9000.

Table of Contents

Introduction 3

Section 1:
Safety 6

Section 2:
Setup and Operation 7
Maintenance 8

Section 3:
Installation Diagrams 9
Parts Lists 10

Section 4:
Running Gear 13

Section 5:
Trip Devices 18

Section 6:
Swivel Plates & Plow Portion Hitches 25

Section 7:
Cutting Edges, Curb Guards, Wear Guards 27

Section 8:
Warranty Policy & Procedure 31

List of Figures

FIGURE 1 - Henke One-Way Fixed-Angle Snowplow ..... COVER
FIGURE 3-1 - Henke One-Way Fixed-Angle Snowplow 9
FIGURE 3-2 – Nose Guard Comparison 12
FIGURE 4-1 - Runner Shoe Assembly 13
FIGURE 4-2 - Mushroom Shoe Assembly 14
FIGURE 4-3 - Pneumatic Running Gear 15
FIGURE 4-4 - Pneumatic Wheel Kit 5-Lug Hub 16
FIGURE 4-5 - Outer Tube & Yoke Assembly 17
FIGURE 5-1 - Enclosed Spring Trip with Attachments 18
FIGURE 5-2 - Enclosed Spring Trip Assembly 19
FIGURE 5-3 - Enclosed Spring Trip Adjustment 20
FIGURE 5-4 - External Compression Trip Assembly 21
FIGURE 5-5 - Standard Mechanical Trip Assembly Operation 22
FIGURE 5-6 - Standard Mechanical Trip Assembly 23
FIGURE 6-1 - Universal Quick Hitch (UQH) 24
FIGURE 6-2 - Swivel Plates & Plow Hitches 25

List of Tables

TABLE 3-1 - Henke One-Way Fixed-Angle Snowplow, Parts List 10
TABLE 3-2 – Nose Guard Comparison 11
TABLE 4-1 - Runner Shoe Assembly, Parts List 12
TABLE 4-2 - Mushroom Shoe Assembly, Parts List 13
TABLE 4-3 - Pneumatic Running Gear, Parts List 14
TABLE 4-4 - Pneumatic Wheel Kit 5-Lug Hub, Parts List 15
TABLE 4-5 - Outer Tube & Yoke Assembly, Parts List 16
TABLE 5-1 - Enclosed Spring Trip with Attachments, Parts List 18
TABLE 5-2 - Enclosed Spring Trip Assembly, Parts List 19
TABLE 5-3 - External Compression Trip Assembly, Parts List 20
TABLE 5-4 - Standard Mechanical Trip Assembly, Parts List 21
TABLE 6-1 - Universal Quick Hitch (UQH) , Parts List 25
TABLE 7-1 - Cutting Edges 27
TABLE 7-2 - Cutting Edge Hardware 28
TABLE 7-3 - Henke Curb Guards 29

<<THIS PAGE IS INTENTIONALLY LEFT BLANK>>

SAFETY SECTION

© 2015 Alamo Group Inc.

SAFETY

GENERAL SAFETY INSTRUCTIONS AND PRACTICES

A careful operator is the best operator. Safety is of primary importance to the manufacturer and should be to the owner/operator. Most accidents can be avoided by being aware of your equipment, your surroundings, and observing certain precautions. The first section of this manual includes a list of Safety Messages that, if followed, will help protect the operator and bystanders from injury or death. Read and understand these Safety Messages before assembling, operating or servicing this Implement. This equipment should only be operated by those persons who have read the manual, who are responsible and trained, and who know how to do so responsibly.

The Safety Alert Symbol combined with a Signal Word, as seen below, is used throughout this manual and on decals which are attached to the equipment. The Safety Alert Symbol means: "ATTENTION! BECOME ALERT! YOUR SAFETY IS INVOLVED!" The Symbol and Signal Word are intended to warn the owner/operator of impending hazards and the degree of possible injury faced when operating this equipment.

Practice all usual and customary safe working precautions and above all--- remember safety is up to YOU. Only YOU can prevent serious injury or death from unsafe practices.

DANGER Indicates an imminently hazardous situation that, if not avoided, WILL result in DEATH OR VERY SERIOUS INJURY.

WARNING Indicates an imminently hazardous situation that, if not avoided, COULD result in DEATH OR SERIOUS INJURY.

CAUTION Indicates an imminently hazardous situation that, if not avoided, MAY result in MINOR INJURY.

Important Identifies special instructions or procedures that, if not strictly observed, could result in damage to, or destruction of the machine, attachments or the environment.

NOTE: *Identifies points of particular interest for more efficient and convenient operation or repair.*

READ, UNDERSTAND, and FOLLOW the following Safety Messages. Serious injury or death may occur unless care is taken to follow the warnings and instructions stated in this Manual and in the Safety Messages on the implement. Always follow the instruction in this manual and use good common sense to avoid hazards.

Pictographs are used throughout this manual to help bring your visual attention to safety issues.

SAFETY HAZARD	SAFETY AVOIDANCE	SAFETY PREVENTION
Pictograph surrounded by a triangle indicates a Safety Hazard that must be avoided. *Example:* 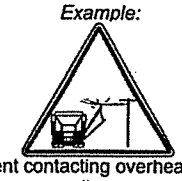 Equipment contacting overhead electrical lines	Pictograph by itself or inside a box indicates an avoidance procedure that should be followed to prevent injuries. *Example:* 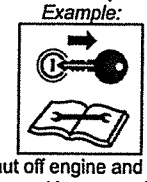 Always shut off engine and remove key before working on equipment.	A circle with a slash through it indicates an action that is prohibited. *Example:* No Smoking

NOTE: *If you want a translation of this safety section in one of the following Languages, please contact: Translations at 1502 E. Walnut Street Seguin, TX 78155; Fax: (830) 372-9529; Safety Section Translations are available in Spanish, Portuguese, French, German, Russian.* P-GS-01

© 2015 Alamo Group Inc.

OPERATOR SAFETY

	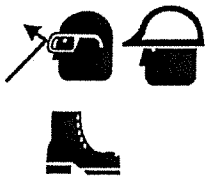		
Read and understand Operator's Manual	Wear Hard Hat, Safety Glasses & Safety Shoes	Never use Drugs or Alcohol when operating equipment	Wear Safety Vest when operating on or near roads

WARNING TO AVOID SERIOUS INJURY OR DEATH DO THE FOLLOWING:

- **READ, UNDERSTAND** and **FOLLOW** Operator's Manual instructions, Warnings and Safety Messages.
- **WEAR SAFETY GLASSES**, safety shoes, hard hat and gloves when operating or repairing equipment
- **DO NOT WEAR** loose clothing or jewelry to avoid rotating parts entanglement injury.
- **DO NOT USE DRUGS** or **ALCOHOL** before or while operating equipment.
- **DO NOT ALLOW** anyone to operate equipment under the influence of drug or alcohol.
- **CONSULT** medical professional for medication impairment side effects.
- **STAY ALERT**, prolonged operation can cause fatigue; **STOP** and **REST**.

GENERAL OPERATING SAFETY

VISIBILITY CONDITIONS WHEN PLOWING:
- **OPERATE IN DAYLIGHT** or with lights that give at least 100 yards clear visibility.
- **BE ABLE TO SEE** and identify passersby, steep slopes, ditches, drop-offs, overhead obstructions, power lines, debris and foreign objects.

GROUND SPEED WHEN PLOWING:
- **NORMAL SPEED** range is between 5 to 45mph.
- **ADJUST plowing SPEED** for terrain conditions.
- **REDUCE plowing SPEED** when near steep slopes, ditches, drop-offs, overhead obstructions, and power lines.

SAFETY SIGNS AND WARNING DECALS:
- **REPLACE** missing, damaged or unreadable safety signs immediately.

SHIELDING:
- **NEVER** remove protective shields and guards! **NEVER** modify or cut protective shields or guards!

PROLONGED OPERATION IN COLD WEATHER:
- May Cause Operator Hypothermia affecting safe operation of implement.
- Wear appropriate clothing and take scheduled breaks.
- If possible shut down equipment, exit cab, and warm body in properly heated area.
- **NEVER** operate implement in fatigued or impaired mental state.

COMMUNICATION:
- Verbal Communication can be difficult and dangerous near implement.
- Operating instructions and directions should be made prior to starting implement.
- If communication is necessary completely shutdown and exit implement.
- **NEVER** allow anyone to approach implement while in operation.

RIDING PASSENGERS:
- Never allow passengers whose presence distracts from safe operation or transporting of implement
- If passengers presence is needed, passenger must be seated securely and belted in passenger seat.
- DO NOT allow passenger in any other area of implement, other than in passenger seat during operation or transport.

CHEMICAL HAZARD
- Wear appropriate PPE when handling chemicals. Refer to Chemical MSDS sheets.
- Always wear safety glasses, shield, gloves, and apron.
- Wear Respirator when required. ***PN P-OS-01***

© 2015 Alamo Group Inc.

PERSONAL PROTECTION EQUIPMENT - PPE

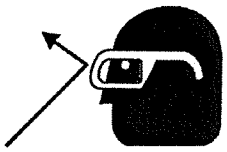			
Wear Safety Glasses	Wear Hard Hat	Wear Safety Shoes & Protective Gloves	Wear Safety Reflective Vest

Always wear all protective clothing and personal safety devices issued to you or called for by job conditions. This should always include:

- Hard hat - when working around raised hopper.
- Steel toed Safety shoes.
- Safety glasses, goggles or face shield.
- Close fitted clothing.
- Heavy gloves (chemical resistant).
- Reflective clothing.

PN PPE-02

SALT AND MATERIAL SPREADING

	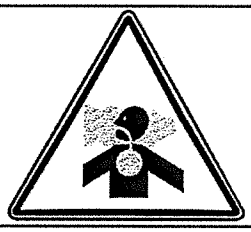	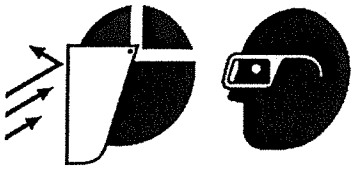
Wear Respirator	Chemical, Dust Hazard	Wear face protection - Face Shield or Goggles

When spreading salt or other materials make sure to wear appropriate protective clothing and personal safety devices such as respirator, heavy gloves that are chemical resistant, face shield, or goggles.

PN PPE-03

© 2015 Alamo Group Inc.

CRUSHING HAZARDS

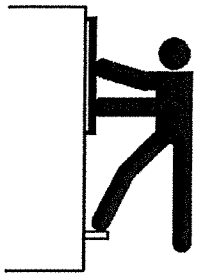

Always use three point contact

⚠ DANGER **TO AVOID SERIOUS INJURY OR DEATH FROM FALLING OFF VEHICLE, EQUIPMENT RUN OVER, ROLLOVER AND CRUSHING BY FALLING IMPLEMENT:**

CRUSHING BY FALLING from EQUIPMENT

- **ALWAYS BUCKLE UP** seat belt when operating vehicle and equipment.
- **ONLY OPERATE** vehicle and equipment while seated in vehicle seat.
- **STOP VEHICLE ENGINE**, place transmission into park, engage parking brake, and remove key.

TO AVOID FALLING OFF OR BEING CRUSHED BY EQUIPMENT

- Use extreme care when climbing onto vehicle or attachment. Also always use three point contact using available handles and steps on vehicle or power unit while exiting.
- Removing the vehicle key is a lockout procedure to prevent a coworker from starting the vehicle while someone is working on attachment.
- Never Attempt to mount the vehicle or attachment while unit is moving.
- Do not remove safety latches or chains on stowed equipment unless stowed equipment is being held in place by active hydraulic power or other secure method to prevent if from dropping.

TO AVOID CHILDREN FALLING OFF OR BEING CRUSHED BY EQUIPMENT:

- **NEVER ALLOW** children to play on or around vehicle or equipment.

PN P-CH-01

© 2015 Alamo Group Inc.

CONNECTING OR DISCONNECTING IMPLEMENT SAFETY

		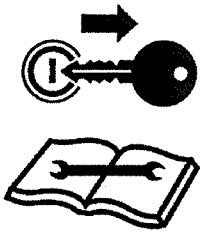
Foot Crushing Hazard	Hand Crushing Hazard	Stop Vehicle, Remove Key and Read Manual

DANGER **TO AVOID SERIOUS INJURY OR DEATH FROM BEING CRUSHED BY VEHICLE OR ATTACHEMENT:**

WHEN ATTACHING UNIT TO VEHICLE:

- **DO NOT ALLOW BYSTANDERS** between vehicle and plow.
- Keep hands and body clear of the attachment and the attachment mounts.

BEFORE connecting and disconnecting Plow Components:

- **STOP VEHICLE ENGINE**, place transmission into park, engage parking brake, and remove key.

WHEN connecting and disconnecting Plow:

- DO NOT crawl or walk under the Plow when in storage position.
- Make sure Plow is properly attached to vehicle and the retaining pins, hardware, chains, and cables securely lock the Attachment into position.
- DO NOT attempt to disconnect trip edge by hand. Trip devices are spring loaded and sudden movement can occur resulting in serious injuries. *PN P-CD-01*

© 2015 Alamo Group Inc.

RUN OVER HAZARDS

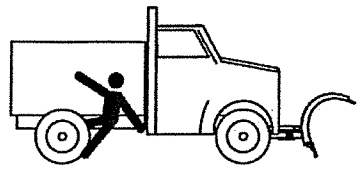	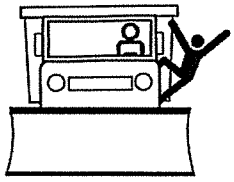	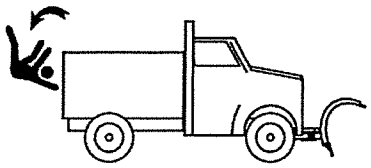
Operator Run over hazard	Rider fall off Run over hazard	Rider fall off Run over hazard

DANGER **TO AVOID SERIOUS INJURY OR DEATH FROM FALLING OFF VEHICLE OR EQUIPMENT RUN OVER:**

- **ONLY** start vehicle while seated in vehicle seat.
- **ALWAYS BUCKLE UP** seat belt when operating vehicle and equipment.
- **ONLY OPERATE** vehicle and equipment while seated in vehicle seat.
- **NEVER ALLOW RIDERS** on vehicle or implement.
- Ensure area is clear around vehicle and equipment before starting or operating equipment.

WHEN MOUNTING AND DISMOUNTING VEHICLE:

- **ONLY mount or dismount when vehicle and moving parts are stopped.**
- **STOP ENGINE, engage parking brake, lower implement, allow all moving parts to stop and remove key before dismounting from vehicle.** *PN P-RO-01*

© 2015 Alamo Group Inc.

THROWN OBJECTS HAZARDS

		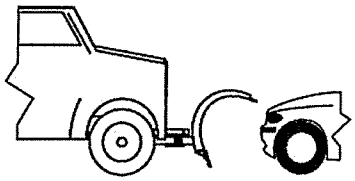
Plow Thrown Objects Hazard	Inspect Area Remove foreign objects	Do Not let Plow contact solid objects

⚠ DANGER **PLOW IS CAPABLE OF PROPELLING OBJECTS UP TO 75 FEET.**

TO AVOID SERIOUS INJURY TO OPERATOR OR PASSERSBY FROM THROWN OBJECTS:

- KEEP bystanders 100 feet away
- Stop plowing if bystanders are within the potential thrown area.

STOP PLOWING IF PASSERSBY ARE WITHIN 100 FEET:

- Make sure no bystander, animal or obstruction such as vehicle, building or street sign are within the width of plow.
- Avoid hitting solid, or oversized objects. Objects could become airborne and cause personal injury or damage to equipment.
- Remove or mark any foreign objects that could be propelled or cause damage to plow.

PLOW OPERATION:

- DO NOT exceed Plow's rated plowing speed.
- Ensure plow is equipped with warning signals to alert motorist and pedestrians.
- Always turn on all safety lights and flashers when operating plow. *PN P-TO-01*

© 2015 Alamo Group Inc.

BLADE CONTACT HAZARDS

	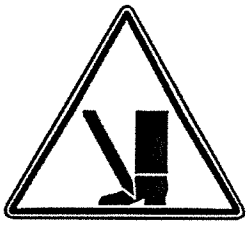	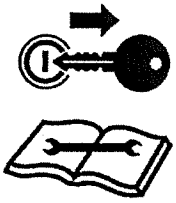
Do not put fingers underneath Plow blade	Do not put foot underneath Plow blade	Stop Tractor Remove Key Read Manual

⚠ DANGER **KEEP AWAY FROM BLADE TO AVOID SERIOUS INJURY OR DEATH FROM BLADE CONTACT:**

- **STAY AWAY** and **KEEP HANDS, FEET** and **BODY AWAY** from plow blade and parts until engine has come to a complete stop.
- **DO NOT** put hands or feet under plow blade.
- **STOP,** disengage power and ensure plow is resting and supported on blocks before adjusting plow blade.
- **STOP, LOOK,** and **LISTEN** before approaching the plow to make sure engine has stopped. ***PN P-BC-01***

HIGH PRESSURE OIL LEAK HAZARD

High pressure oil penetrating skin	High pressure oil eroding skin	Using cardboard to check for oil leaks

⚠ DANGER **TO AVOID SERIOUS INJURY OR DEATH FROM HIGH PRESSURE HYDRAULIC OIL LEAKS PENERATING SKIN:**

- **DO NOT OPERATE** equipment with oil or fuel leaks.
- **KEEP** all hydraulic hoses, lines and connections in **GOOD CONDITION** and **TIGHT** before applying system pressure.
- **RELIEVE HYDRAULIC PRESSURE** before disconnecting lines or working on the system.
- **REMOVE** and replace hose if you suspect it leaks. Have dealer test it for leaks.

HIGH PRESSURE FLUID LEAKS CAN BE INVISIBLE.

WHEN CHECKING FOR HYDRAULIC LEAKS AND WORKING AROUND HYDRAULIC SYSTEMS:

- **ALWAYS WEAR** safety glasses and impenetrable gloves.
- **USE** paper or cardboard to search for leaks.
- **DO NOT USE** hands or body parts to search for leak.
- **KEEP** hands and body **AWAY** from pin holes and nozzles ejecting hydraulic fluid.
- Injected Hydraulic fluid may cause gangrene if not surgically removed immediately by a doctor familiar with this form of injury. ***PN HP01***

© 2015 Alamo Group Inc.

TRANSPORTING HAZARDS

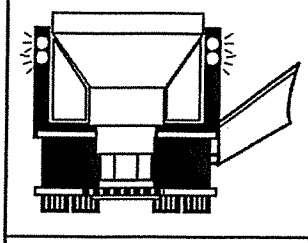	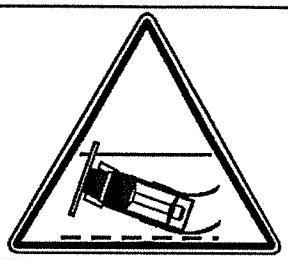		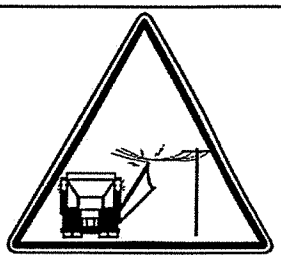
Use reflectors and Flashing Lights	Loss of Control Speeding and Stopping Hazard	Engage Transport Pins on Plow	Plow contacting overhead electrical lines

⚠WARNING **TO AVOID SERIOUS INJURY AND DEATH WHEN OPERATING OR TRANSPORTING EQUIPMENT:**

- **KEEP** transport speed to the posted speed limit to maintain control of equipment.
- **REDUCE SPEED** on inclines, on turns and in poor plowing conditions.
- **DO NOT TOW** with trucks or other vehicles use a flatbed vehicle to transport.
- **FOLLOW** all local traffic regulations.

BEFORE TRANSPORTING OR TOWING IMPLEMENT:

- Ensure equipment has been stowed in transport position and secured with safety latches or chains.

VEHICLE INSPECTION:

- **CHECK** steering and braking for proper operation and in good condition.
- **CHECK** that transport pins are engaged.
- **CHECK** reflectors and warning lights for proper operation and visibility behind unit.
- **ROUTINELY** inspect the equipment's headlights, brake lights, backup lights, and turn signal lights for operational condition.
- Always turn on all safety lights and flashers when you operate the implement.
- **CHECK** that your driving vision is not impaired by cab while seated in vehicle seat.
- **ADJUST** your operating position, mirrors, and implement transport for clear vision for traveling and traffic conditions.

DETERMINE STOPPING CHARACTERISTICS OF VEHICLE AND IMPLEMENT FOR TRANSPORTING OR OPERATING:

- With added weight and severe weather conditions stopping distances may increase.
- Only operate at speeds that you can properly control equipment.

DETERMINE MAXIMUM TURNING SPEED BEFORE OPERATING ON ROADS OR UNEVEN GROUND:

- **TEST** equipment in slowly increasing speed on turns to determine it can be operated at higher speeds.
- **USE REDUCED** turning speeds on sharp turns to avoid equipment turning over.
- Center of gravity may have shifted with equipment installation.

WHEN OPERATING OR TRANSPORTING EQUIPMENT:

- Always **WEAR SEAT BELT** when operating or transporting spreader.
- **USE** low speeds to avoid overturn while operating or transporting.
- **USE** low speeds and gradual steering on curves, hills, rough or uneven surfaces and on wet roads.
- Use extreme caution when operating the equipment in traffic.
- Use all equipped warning signals to alert motorist and pedestrians of the presence of the equipment
- DO NOT leave piled material on roadway. Material can be a hazard to other motorist.

TO AVOID SERIOUS INJURY OR DEATH FROM ELECTRICAL CONTACT WHEN WORKING AROUND ELECTRICAL POWER LINES AND UTILITY LINES:

- **INSPECT** area for overhead power lines, obstructions, cables and utility lines, municipal, or other type structure.
- **KEEP** Plow 10 feet or greater distance from all power lines and overhead obstructions.
- **DO NOT** allow Plow to contact with any utility, municipal, or type of structures and obstructions. *P-TH-01*

© 2015 Alamo Group Inc.

HAZARDS WITH MAINTENANCE OF IMPLEMENT CONTINUED

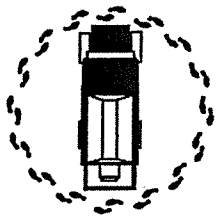	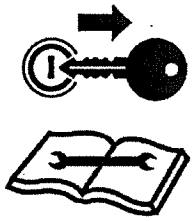	
Periodically inspect all moving parts and tighten all fasteners	Stop engine and remove key before conducting maintenance	Secure body with blocks before doing any maintenance

WARNING **AVOID SERIOUS INJURY OR DEATH FROM COMPONENT FAILURE BY KEEPING IMPLEMENT IN GOOD OPERATING CONDITION BY PERFORMING PROPER SERVICE, REPAIRS AND MAINTENANCE.**

PERFORM SERVICE, REPAIRS, LUBRICATION AND MAINTENANCE OUTLINED IN IMPLEMENT MAINTENANCE SECTION:

- **INSPECT** before each use for loose fasteners, worn or broken parts, leaky or loose fittings, missing or broken cotter keys and washers on pins, and all moving parts for wear.
- **REPLACE** Blade or any worn or broken parts with authorized service parts.
- **LUBRICATE** unit as specified by lubrication schedule.
- Ensure all fluid levels are properly filled.
- **NEVER** lubricate, adjust or remove material while it is running or in motion.
- **TORQUE** all bolts and nuts as specified.
- Check tire conditions.
- Never remove debris or unclog jams from spring pressurized pinch points by hand.
- Avoid contact with recently used equipment that may still be hot.
- Ensure the scheduled maintenance is up to date.
- Do Not modify or alter equipment/plow.
- Do Not leave snow plow unattended while snow plow wing is in an unsecured raised position.
- Do Not crawl or walk under unsecured raised equipment.

SAFETY SHIELDS, GUARDS AND SAFETY DEVICES INSPECTION:

- **KEEP** all Steel Guards, Bands, and Skid Shoes in place and in good condition.
- Maintain Safety Signs and Decals in good readable condition.
- **REPLACE** any missing, broken or worn safety shields, guards and safety devices.
- Engine Exhaust, some of its constituents, and certain vehicle components contain or emit chemicals known to the state of California to cause cancer, birth defects or other reproductive harm.
- Battery posts, terminals and related accessories contain lead and lead compounds, chemicals known to the state of California to cause cancer, birth defects or other reproductive harm. ***PN P-HM-02***

© 2015 Alamo Group Inc.

PARTS INFORMATION

HENKE Snow Plows use balanced and matched system components for plows, hitches, and other components. These parts are made and tested to HENKE specifications. Non-genuine or "will fit" parts do not consistently meet these specifications. The use of non-genuine or "will fit" parts may reduce Snow Plow performance, void HENKE warranties, and present a safety hazard. Use genuine HENKE parts for economy and safety. (SNPG-6)

SEE YOUR HENKE DEALER

Operator's & Parts Manuals

www.algqr.com/hpm

© 2015 Alamo Group Inc.

HAZARDS WITH MAINTENANCE OF IMPLEMENT

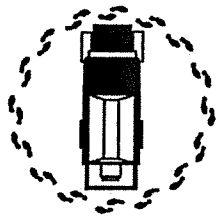	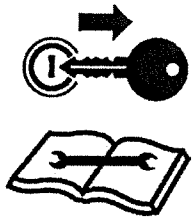	
Periodically inspect all moving parts and tighten all fasteners	Stop engine and remove key before conducting maintenance	Secure body with blocks before doing any maintenance

⚠WARNING **AVOID SERIOUS INJURY OR DEATH FROM COMPONENT FAILURE BY KEEPING IMPLEMENT IN GOOD OPERATING CONDITION BY PERFORMING PROPER SERVICE, REPAIRS, AND MAINTENANCE.**

BEFORE PERFORMING SERVICE, REPAIRS, AND MAINTENANCE ON THE IMPLEMENT:

SECURE EQUIPMENT FOR SERVICE

BLOCK OUT POTENTIAL ENERGY HAZARDS; Rotating Parts, Raised Components, Hydraulic Pressure.

- **STOP ENGINE**, engage parking brake, and allow all moving parts to stop and remove key before dismounting from vehicle seat.
- Securely block up raised equipment. Use large blocks on soft or wet soil.
- **PUSH** and **PULL** Remote Hydraulic Cylinder lever to relieve hydraulic pressure.
- **DISCONNECT IMPLEMENT** Hydraulic **HOSES** from vehicle.

WEAR SAFETY GLASSES, PROTECTIVE GLOVES and follow SAFETY PROCEDURES when performing service, repairs, and maintenance on the implement:

- Always **WEAR** protective **GLOVES** when handling chemicals or worn component with sharp edges.
- Always **WEAR GLOVES** and **SAFETY GLASSES** when servicing components.
- **AVOID CONTACT** with hot hydraulic oil or chemicals.
- **SECURELY** support or **BLOCK UP** raised implement, framework, and lifted components before working underneath equipment.
- **STOP** any implement movements and **SHUT-OFF VEHICLE** engine before doing any work procedures.
- **USE** step ladder or raised stands to reach high equipment areas inaccessible from ground.
- **ENSURE** good footing by standing on solid flat surfaces when getting on implement to perform work.
- **FOLLOW** manufacturer's instructions in handling oils, solvents, cleansers, and other chemical agents.
- **DO NOT** change any factory-set hydraulic calibrations to avoid component or equipment failures.
- **DO NOT** modify or alter implement, functions or components.
- **DO NOT WELD** or straighten broken, cracked or broken blade

PN P-HM-01

© 2015 Alamo Group Inc.

<<THIS PAGE IS INTENTIONALLY LEFT BLANK>>

OWFA PLOW

Use the following decals from sheet 7332006.

Henke Part No.	Qty.	Description
7331003	1	Use genuine Henke replacement parts
7331004	1	Secure body with blocks
7331005	1	Stop Engine Stay clear of moving parts
7331007	1	Read and understand operator's manual If you cannot read English get assistance
7331011	1	Keep Push Frame parallel to ground
7331012	1	Raise plow before backing

(NOTE: Some decals on sheet 7332006 are not needed on this product. Discard decals not needed.)

Other Attachments and Decals

7330014	1	Henke Logo Decal
7330012	1	Serial Number Tag
7330023	4	Tack - Serial Tag
7300047	1	Product Manual Canister
7300048	1	Plug for Product Manual Canister
7020391	3	Stud, 1/2-20 X 5/8 Non- Flange
7040002	3	Flat Washer, 1/4 USS
7030044	3	Nylock Nut, 1/4-20

Instructions:

Follow these instructions to position the above items to your Henke product for safety and professional appearance. Apply on clean surfaces only. They should be properly applied and kept in good condition. If a decal is worn out, torn, or otherwise defaced, call us for an immediate replacement at 1-913-682-9000, or 1-888-682-9010.

DECALS

1. Position 7331007, 7331005, and 7331004 to the LEFT of 7331011, 7331012, and 7331003 of the Moldboard as shown.

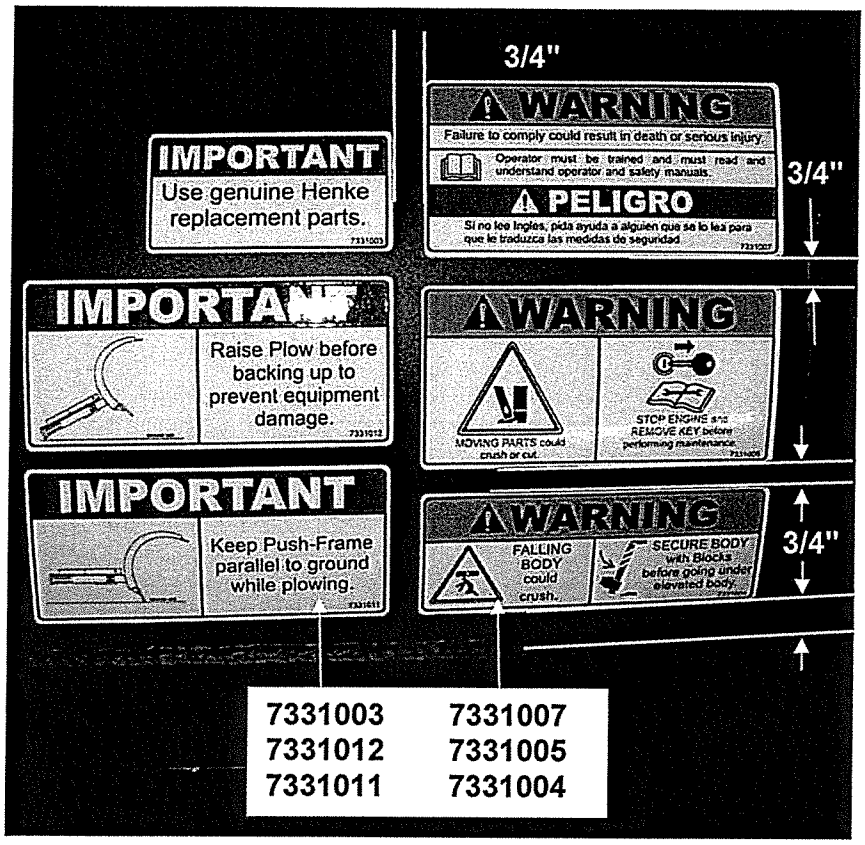

2. Position 7330012 Serial Plate as shown.

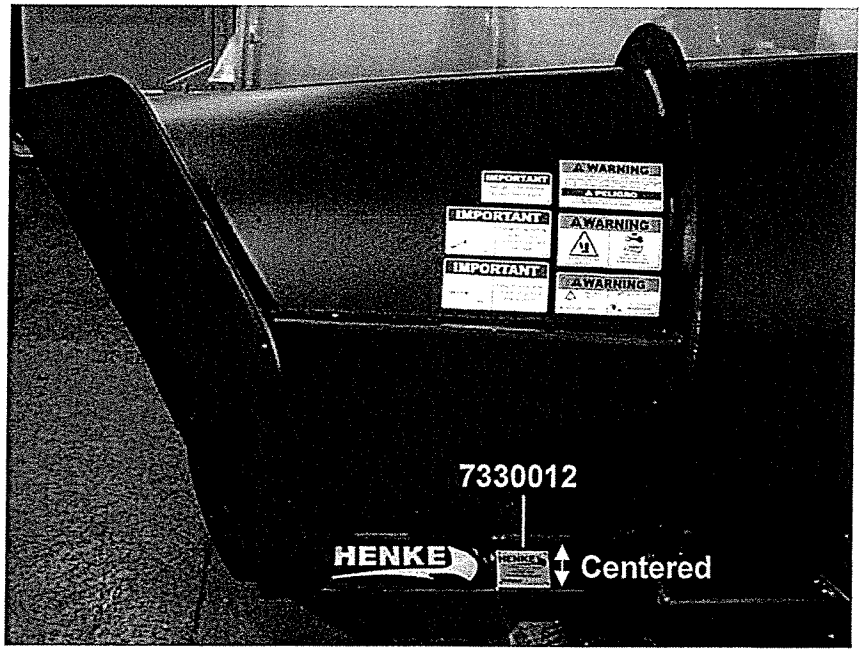

3. Position 7331009 (Qty. 2) as shown.

4. Position 7330014, Henke Logo in.

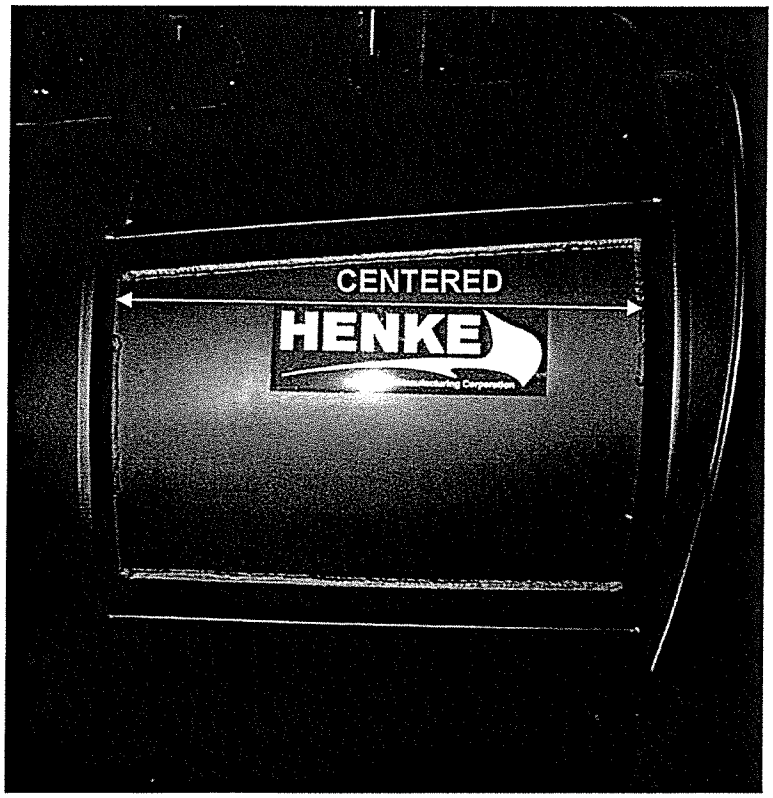

IN SEASON MAINTENANCE

Snow removal equipment must be cared for and maintained regularly. Daily or pre-route inspection and maintenance are necessary. Failure to do so may affect efficiency and safety.

A visual inspection must be carried out after every 8 hours of operation. Look for damaged components, bends, cracked welds or hydraulic leaks. **REPAIR IMMEDIATELY!** It is recommended to re-torque all bolts after the first 8 hours of use and to regularly check for loosened or missing fasteners. Replace any damaged or missing fasteners immediately.

Because of the environment in which snow equipment is expected to operate, hydraulic lines, fasteners, wearable or replaceable items and warning decals may become damaged by snow, ice and road debris. These items must be inspected daily and replaced if necessary to avoid equipment damage or personal injury.

Lubrication of moving parts is of the utmost importance. Exposure to snow, ice, salt and road debris will wash away lubrication quickly and it may be necessary to inspect and reapply lubrication more than once a day.

END OF SEASON MAINTENANCE

GROUND ENGAGING COMPONENTS

- **CUTTING EDGES & GUARDS:** Replace any broken cutting edges, unevenly or excessively worn cutting edges, and broken or worn wear guards.

- **RUNNING GEAR:** Replace broken, worn, or missing running gear shoes, and any damaged adjuster leg components. Grease internal threads and sliding members (it's best to disassemble and grease directly; zerks aren't as effective at greasing these areas).

- **HARDWARE:** Replace missing or broken bolts. Proper torque is important! Use grade 8 plow bolts for steel cutting edges.

HYDRAULICS

- **HOSES:** Plug or cap any QC fittings or any open hose ends. Inspect hoses for any leaks or potential leaks. Secure hoses with hose clamps.

- **CYLINDERS:** Check for leaks, and any chrome rod dents or scratches. Apply a light coat of oil or grease on exposed rod surfaces.

FRAME AND MOLDBOARD

- **JOINTS:** Check pins, bushings, and pivot bolts for wear. Make sure all keepers are in place. Make sure shear bolts and pins are same as original equipment (usually grade 2). Some drivers don't like replacing shear pins and will install grade 8 replacements to avoid replacing during a storm. These items are designed to shear to protect the driver and the equipment. **CHECK WELDMENTS FOR CRACKS.**

CABLE AND SHEAVES (IF APPLICABLE)

- **CABLE:** Check cable thoroughly for fraying, kinks, and abnormal wear. Make sure cable is properly routed and seated in all sheaves. Verify that cable clamps have the proper torque and are in the correct orientation and spacing. Cable shall be checked prior to each use or after every 8 hours, whichever comes first.

- **SHEAVES:** Verify that sheave, bushings and retaining pins are in good condition and adequately greased. Make sure that sheaves, bushings and pins do not have any abnormal wear and rotate without restriction.

REPLACE WORN OR BROKEN PARTS FOUND BY ABOVE INSPECTIONS

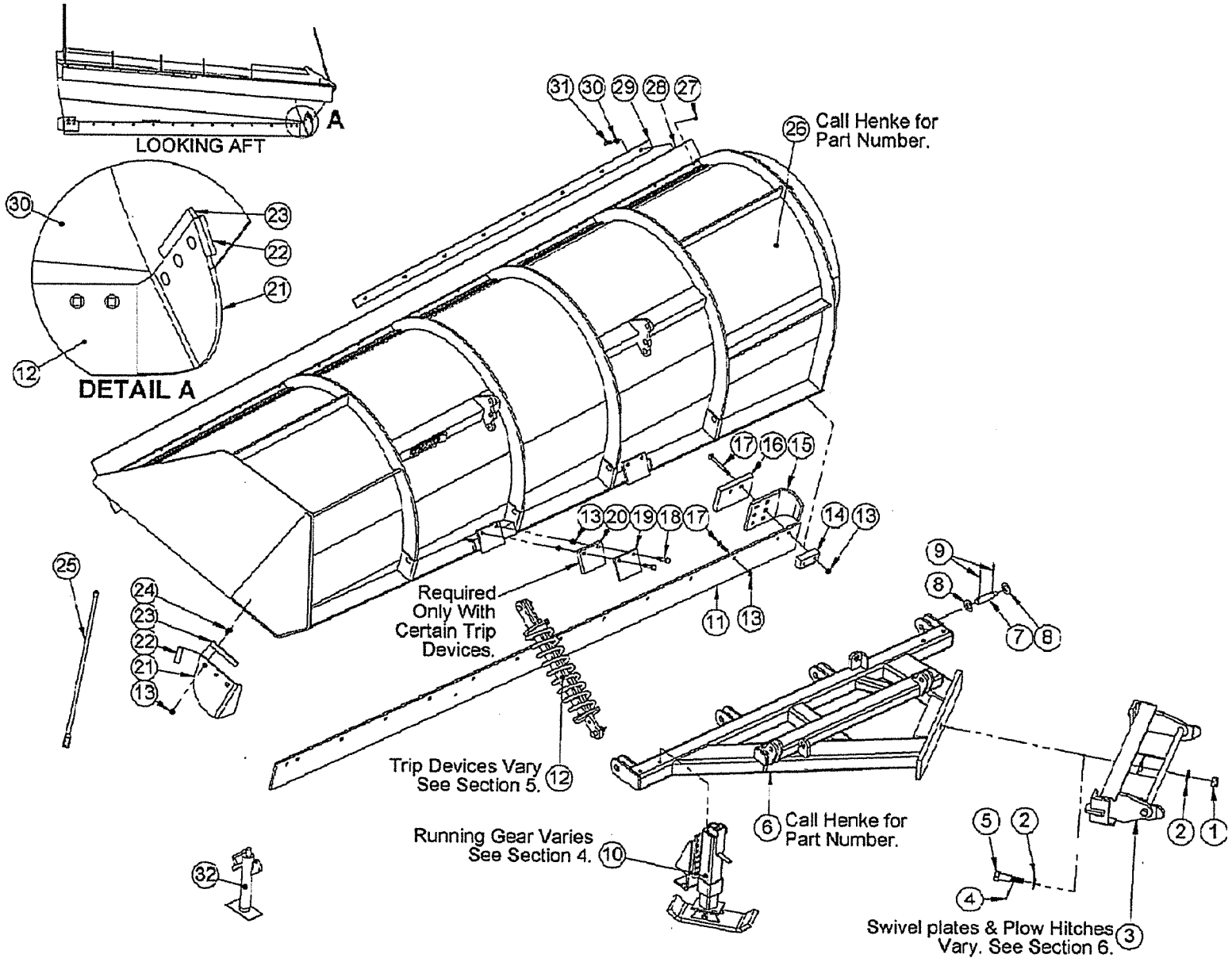

FIGURE 3-1 – Henke One-Way Fixed-Angle Snowplow

TABLE 3-1 – Henke One-Way Fixed-Angle Snowplow, Parts List

Item No.	Qty.	Part No.	Description
1	1	7030023	Slotted Nut, 1 1/4-7
2	2	7040014	Flat Washer, 1 1/4 Hardened, SAE
3	1	Varies, See Section 6	Swivel Plate Assembly
4	1	7050043	Cotter Pin, 3/16 X 2.5
5	1	1300-0372	Swivel Bolt
6	1	Call Henke For Part Number	Fixed Angle Pushframe
7	4	1300-2936	Pin, 1.25 X 5.31 X 3.36
8	8	7040051	Flat Washer, 1 1/4, SAE
9	8	7050099	Cotter Pin, 1/4 X 2.5
10	2	Varies, See Section 4	Running Gear with Bracket
11	Varies	Varies, See Section 5	Trip Device
12	Varies	Varies, See Section 7	Cutting Edge
13	Varies	7030084	Toplock Nut, 5/8-11 GR. C
14	Varies	Varies, See Section 7	Wear Shoe *(Mounts Behind Moldboard)* *Optional, See Section 7*
15	Varies	Varies, See Section 7	Wrap-Around Curb Guard *(Optional) See Section 3*
16	Varies	Varies, See Section 7	Wear Guard, Carbide *(Mounts In Front Of Moldboard)* *Optional, See section 3*
17	Varies	Varies, See Section 7	Plow Bolt
18	4	7020162	Hex Capscrew, 5/8-11 x 3 GR. 8 *Required Only With Certain Trip Devices*
19	2	1300-3302	Retainer *Required Only With Certain Trip Devices*
20	2	1300-3301	Rubber Trip Stop *Required Only With Certain Trip Devices*
21	1	Reference (See TABLE 3-2)	Nose Guard
22	1	1300-1358	Nose Guard Shear Bar, Short
23	1	1300-1357	Nose Guard Shear Bar, Long
24	2-3	7150001	Plow Bolt, 5/8-11 X 2, GR. 8, for Nose Guard
25	1 pair	7300030	Rod Markers, .75 X 36", Orange *(Optional)*
26	1	Call Henke For Part Number	Moldboard Assembly, One Way
27	Varies	7030006	Nylock Nut, 3/8-16
28	Varies	Call Henke For Part Number	Rubber Shield *(Sold by the Foot) (Optional)*
29	Varies	Call Henke For Part Number	Retaining Strip, For Rubber Shield *(Optional)*
30	Varies	7040004	Flat Washer, 3/8 Hardened, USS
31	Varies	7020034	Hex Capscrew, 3/8-16 X 2.0
32	1	7140071	Jackstand Crank with Spud *(Optional)*

<<THIS PAGE IS INTENTIONALLY LEFT BLANK>>

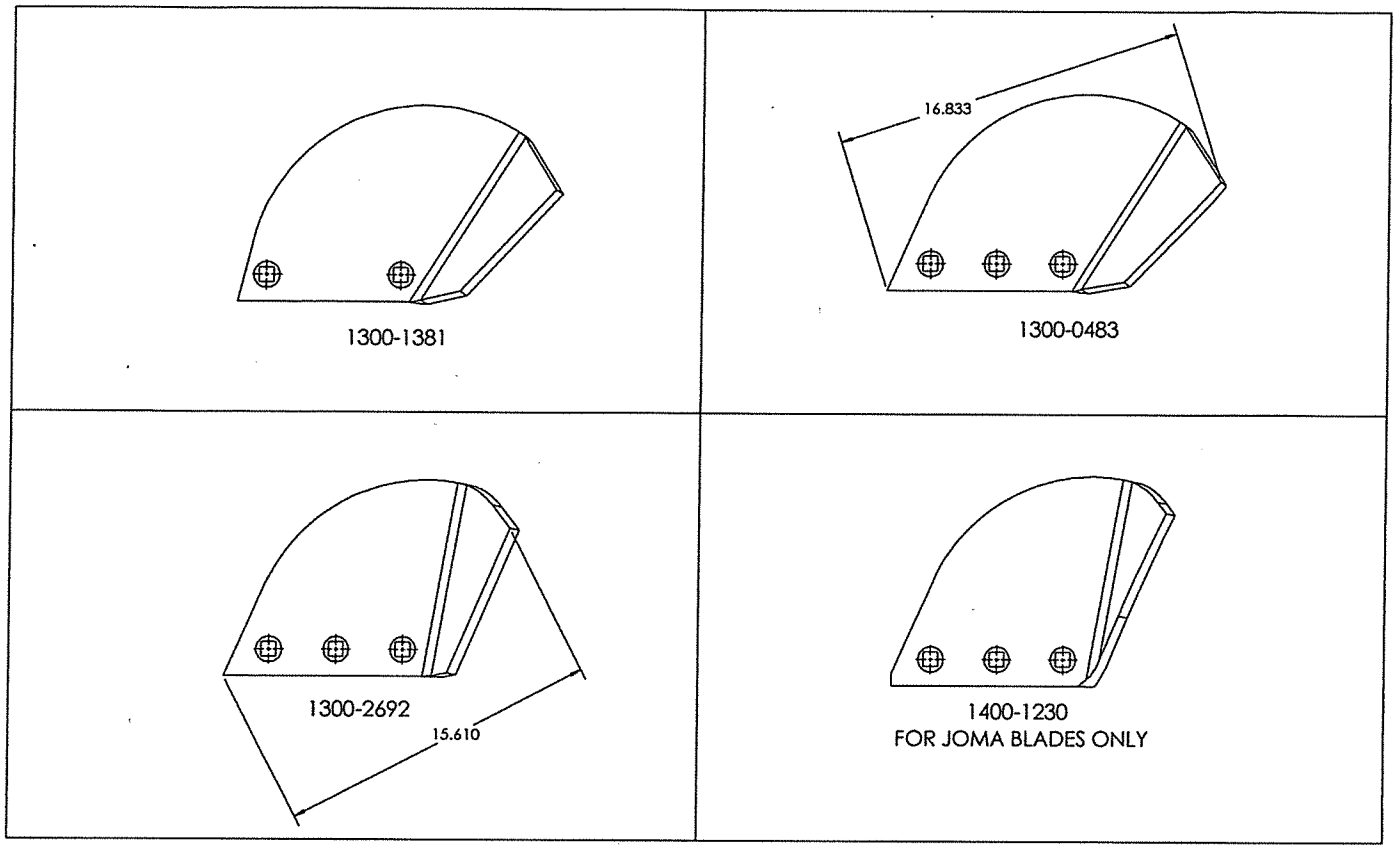

FIGURE 3-2 – Nose Guard Comparison

TABLE 3-2 – Nose Guard Comparison

Part No.	Description
1300-1381	Nose Guard, 30-47 One-Way
1300-0483	Nose Guard, 39-52 One-Way, Built Aug. 2002 & Earlier
1300-2692	Nose Guard, 39-52 One-Way, Built Sept. 2002 & Later
1400-1230	Nose Guard, 39-52 One-Way JOMA BLADE ONLY

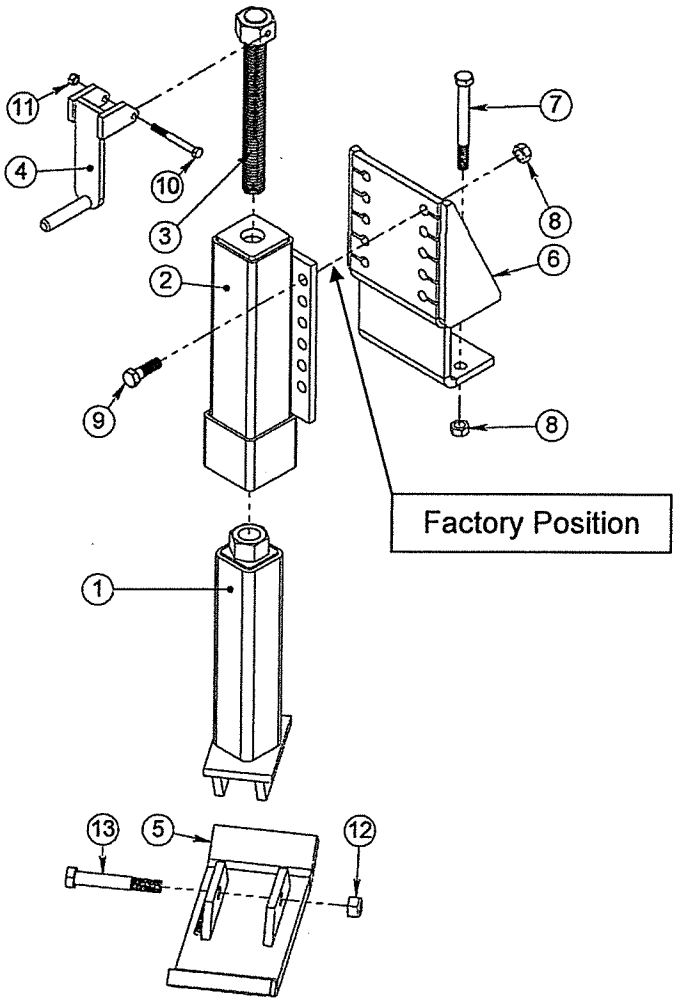

FIGURE 4-1 – Runner Shoe Assembly

TABLE 4-1 - Runner Shoe Assembly, Parts List

ITEM #	QTY	PART #	DESCRIPTION
1	1	199-0068	Inner Tube Assy
2	1	199-0376	Outer Tube Assy
3	1	199-0041	Acme Screw Assy
4	1	199-0019	Running Gear Crank Assy
5	1	199-0409 **or**	Runner, 1x6 LOTOP
		199-0225	LO Runner, Carbide
6	1	199-0066	Mounting Assy, RG to PF
7	2	7020067	Hex Capscrew, 5/8-11 x 6.0 GR. 5
8	6	7030084	Toplock Nut, 5/8-11 GR. C
9	4	7020060	Hex Capscrew, 5/8-11 x 2.0 GR. 8
10	1	7020117	Hex Capscrew, 3/8-16 x 3.5 GR. 5
11	1	7030006	Nylok Nut, 3/8-16 GR. 2
12	1	7020294	Hex Capscrew, 3/4-10 x 5.0 GR. 8
13	1	7030030	Toplock Nut, 3/4-10 GR. C

TABLE 4-2 – Mushroom Shoe Assembly, Parts list

ITEM #	QTY	PART #	DESCRIPTION
3	1	199-0041	Acme Screw Assembly
4	1	199-0019	Crank Assembly
6	1	199-0066	Mounting Assembly
7	2	7020067	Hex Capscrew, 5/8-11 x 6 GR. 5
8	8	7030084	Toplock Nut, 5/8-11 GR. C
9	4	7020060	Hex Capscrew, 5/8-11 x 2 GR. 8
10	1	7020117	Hex Capscrew, 3/8-16 x 3.5 GR. 5
11	1	7030006	Nylok Nut, 3/8-16 GR. 2
14	1	199-0376	Outer Tube Assembly
15	1	199-0044	Inner Tube Assembly
16	1	7140001	Mushroom Shoe, 11"
17	2	7020288	Hex Capscrew, 5/8-11 x 2.5 GR. 8

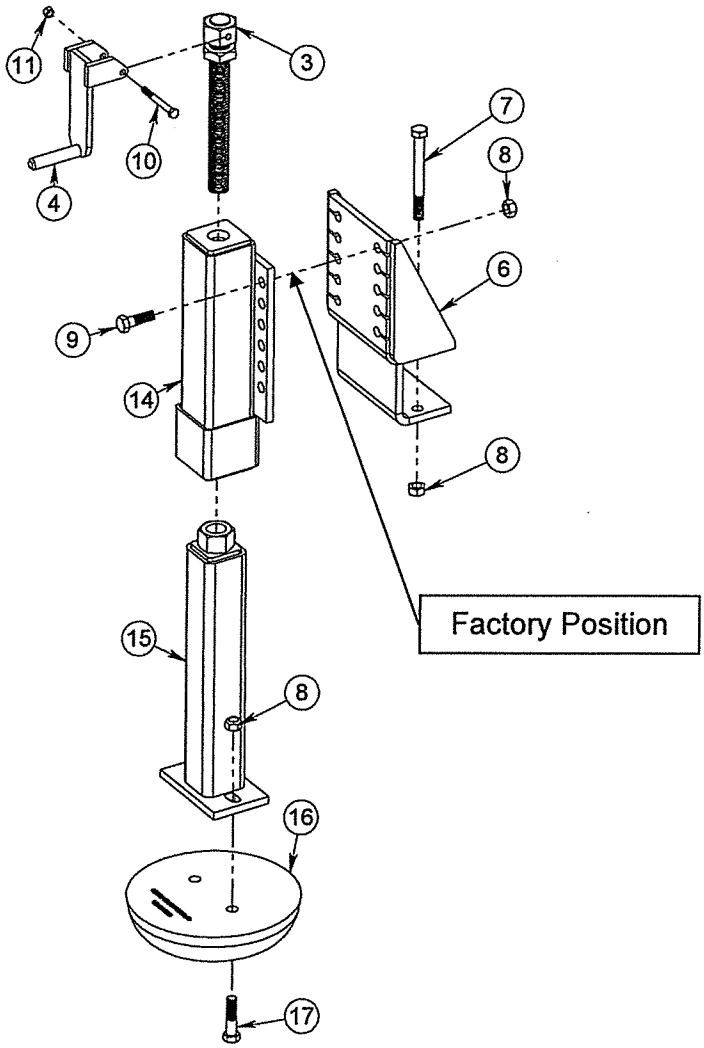

FIGURE 4-2 – Mushroom Shoe Assembly

TABLE 4-3 – Pneumatic Running Gear, Parts List

Item No.	Qty.	Part No.	Description
1	1	7020117	Hex Capscrew, 3/8-16 x 3.5 GR. 5
2	1	199-0019	Running Gear Crank Assembly
3	1	7030006	Nylock Nut, 3/8-16
4	1	199-0041	ACME Screw Assembly
5	1	199-0361	Outer Tube & Yoke Assembly
6	2	7020067	Hex Capscrew 5/8-11 x 6 GR. 5
7	1	199-0362	Inner Tube Assembly
8	2	7030084	Toplock Nut, 5/8-11 GR. C
9	1	199-0294	Pneumatic Hub & Wheel Assembly, 5 - Lug

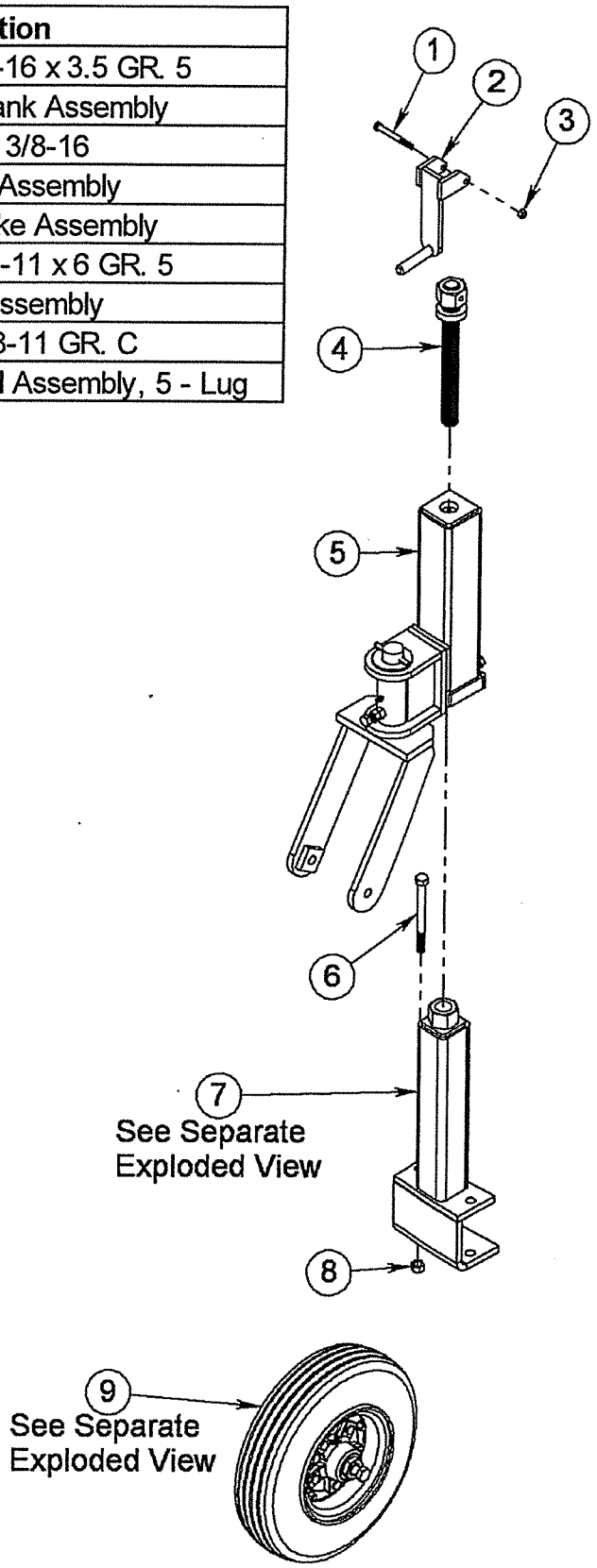

FIGURE 4-3 – Pneumatic Running Gear

TABLE 4-4 – Pneumatic Wheel Kit, 5-Lug Hub, Parts List

Item No.	Qty.	Part No.	Description
1	1	7140095	Pneumatic Rim & Tire Assy, 2 Piece, 5-Lug
2	1	199-0295	Hub & Spindle Group Assy – 5-Lug
3	1	199-0296	Hub Group Assy
4	5	7030039	Lug Nut, 1/2-20
5	2	7010023	Bearing Cup
6	2	7010003	Bearing Cone
7	2	7140067	Grease Seal
8	1	1900-0070	Spindle
9	2	1900-0154	Spindle Nut
10	1	7020070	Hex Capscrew, 5/8-11 x 8 GR. 5
11	1	7040006	Flat Washer, Hardened, 5/8 SAE
12	1	7030084	Toplock Nut, 5/8-11 GR. C
13	1	7090111	Grease Fitting, 1/4-28 Straight

NOTE: **Entire assembly shown may be ordered as 199-0294.**

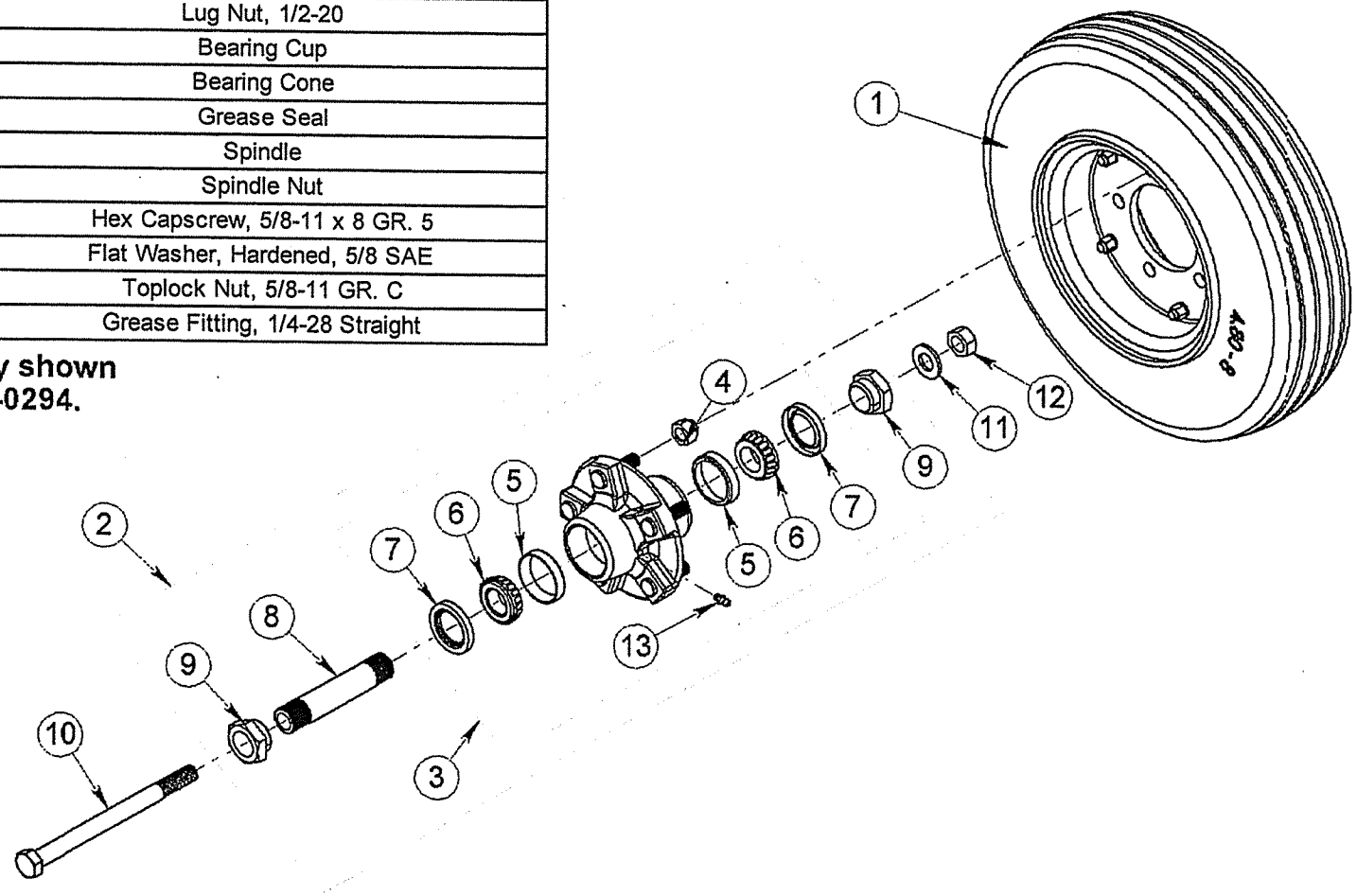

FIGURE 4-4 – Pneumatic Wheel Kit, 5-Lug Hub

TABLE 4-5 – Outer Tube & Yoke Assembly, Parts List

Item No.	Qty.	Part No.	Description
1	1	199-0062	Yoke Assembly
2	1	7050029	Roll Pin, 3/8 x 3.5
3	3	7020120	Hex Capscrew, 1/2-13 x 1.5 GR. 5
4	3	7030009	Nut, 1/2-13 GR. 8
5	1	1900-0075	Damper pad
6	1	7090111	Grease Fitting Straight 1/4-28
7	1	199-0360	Outer Tube Assembly
8	1	7040024	Flat Washer 1 1/2, Hardened, SAE

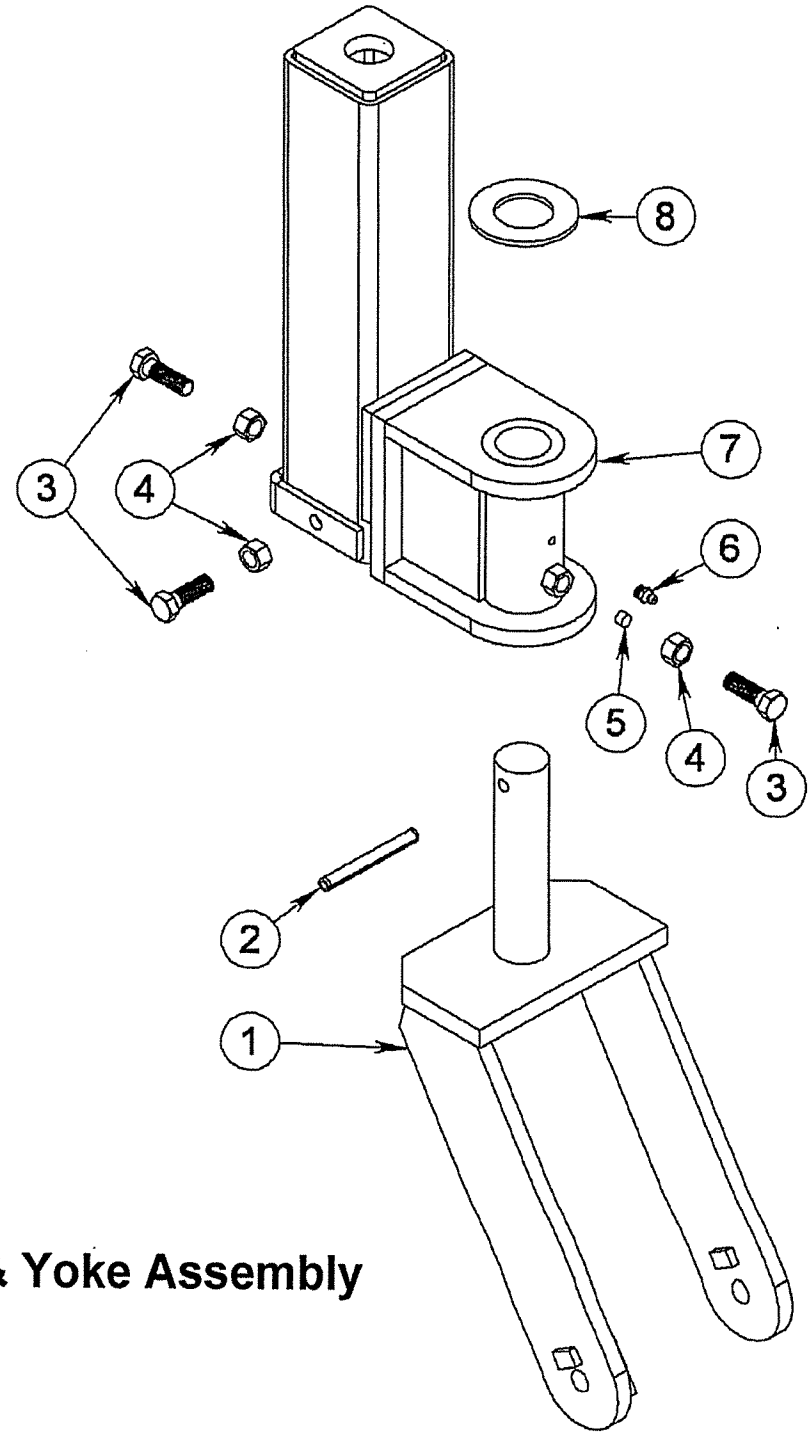

FIGURE 4-5 – Outer Tube & Yoke Assembly

TABLE 5-1 – Enclosed Spring Trip w/ Attachments, Parts List

ITEM NO.	QTY.	PART NO.	DESCRIPTION
1	1	1300-A0174	Canister, Complete (See Separate Exploded View)
2	1	1300-A1828 1300-A0678	Trunnion Plate Assembly, R/H EST * Trunnion Plate Assembly, R/H DEST *
3	1	1300-A1829 1300-A0677	Trunnion Plate Assembly, L/H EST * Trunnion Plate Assembly, L/H DEST *
4	1	1300-0414	Spacer
5	1	7020091	Hex Capscrew, 3/4-10 x 9 Gr. 2
6	9	7040021	Lock Washer, 3/4
7	9	7030013	Nut, 3/4-10 Gr. 8
8	2	7090111	Grease Fitting, 1/4-28
9	8	7020074	Hex Capscrew, 3/4-10 x 2 Gr. 8
10	1	1300-0463	Drilled Bolt
11	1	7030018	Slotted Nut, 1-8 Gr. 2
12	1	7050003	Cotter Pin, 3/16 x 2
13	2	1300-0410	Shear Bar

NOTE: * EST = Single Enclosed Spring Trip (one trip canister per plow)

* DEST = Dual Enclosed Spring Trip (two trip canisters per plow)

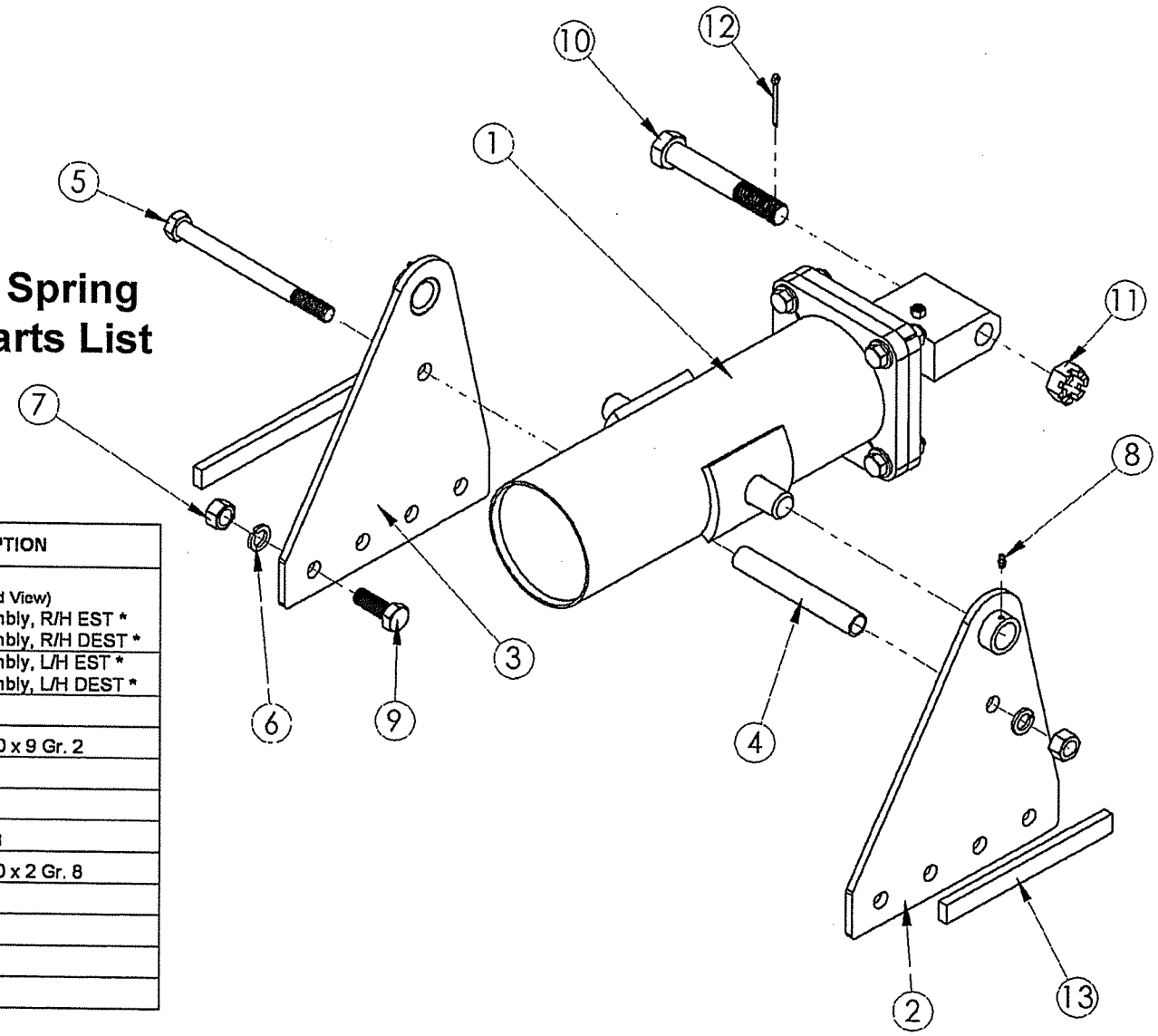

FIGURE 5-1 – Enclosed Spring Trip w/ Attachments

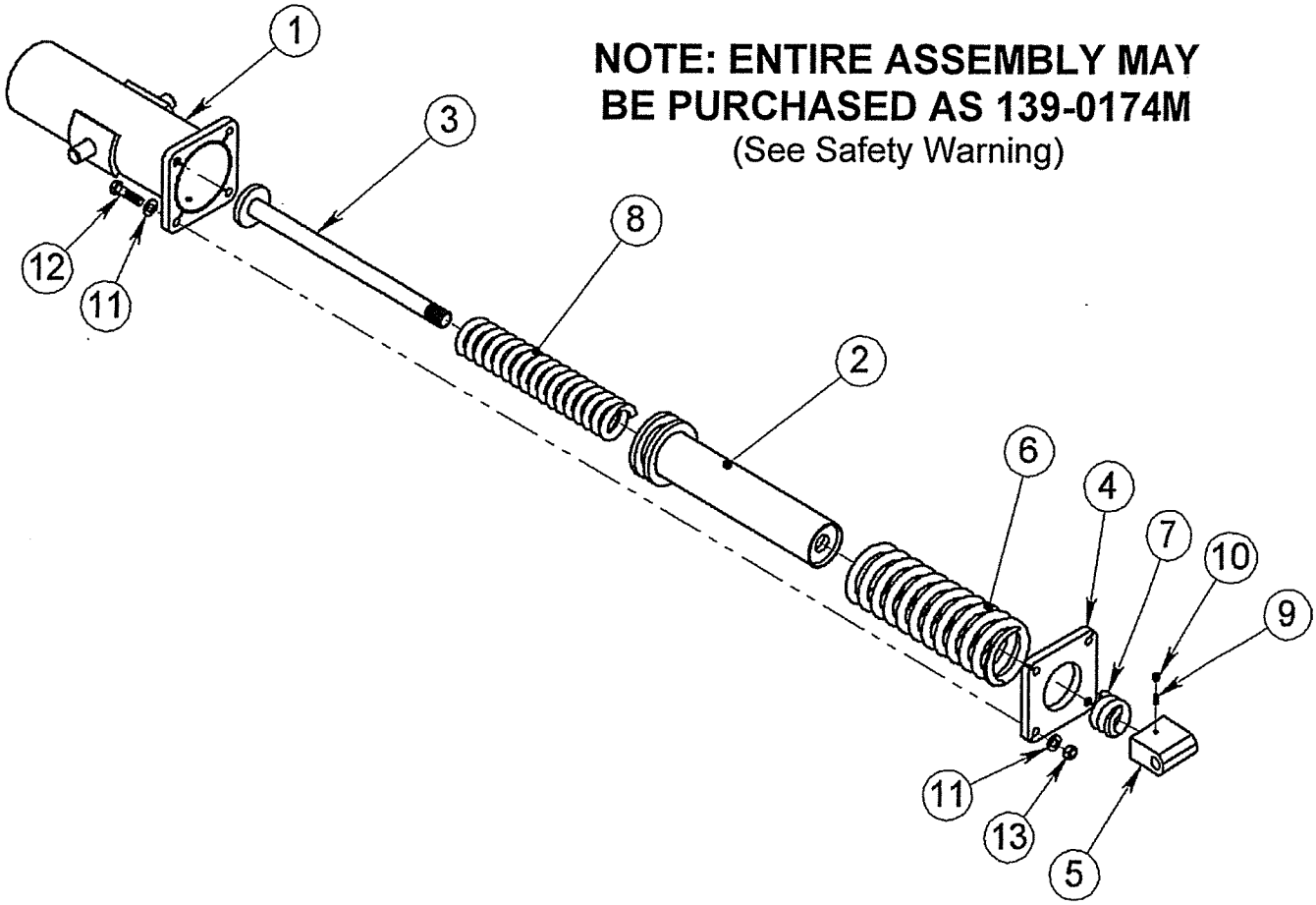

FIGURE 5-2 – Enclosed Spring Trip Assembly

TABLE 5-2 – Enclosed Spring Trip Assembly, Parts List

Item No.	Qty.	Part No.	Description
1	1	139-0753	Housing Assembly
2	1	139-0086	Guide Tube Assembly
3	1	139-0088	Shaft Assembly
4	1	1300-1562	Cap Plate
5	1	1300-1560	Shaft End
6	1	7070009	Compression Spring - Large
7	1	7070011	Compression Spring - Small
8	1	7070010	Compression Spring - Medium
9	1	7020004	Set Screw, 3/8-16 x .75
10	1	7030004	Nut, 3/8-16
11	8	7040006	Flat Washer, 5/8 Hardened, SAE
12	4	7020288	Hex Capscrew, 5/8-11 x 2.5, GR. 8
13	4	7030084	Toplock Nut, 5/8-11, GR. C

Suggested Layback Angle

Single EST - 15° Factory Setting. Do Not Exceed 25°.
Dual EST - 36R, 41R = 15° Factory Setting. Do Not Exceed 25°.
Dual EST - 48R = 20° Factory Setting. Do Not Exceed 27°.
Dual EST - 39-52 = 16°. Do Not Exceed 25°.

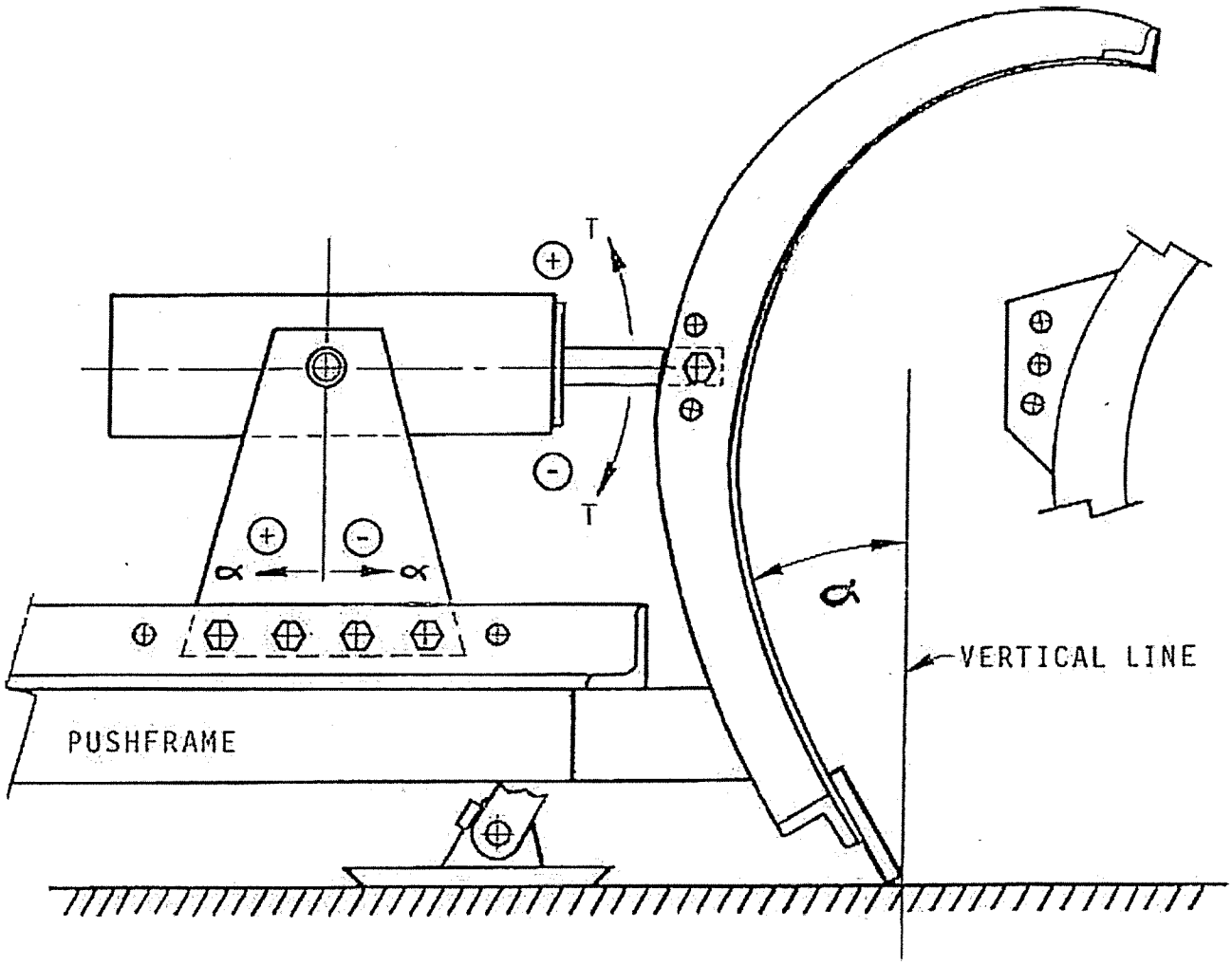

α = LAYBACK ANGLE T= TENSION/ TRIP ADJUSTMENT

NOTE:

If Different Adjustment of the plow moldboard is needed, follow the above diagram.

WARNING: Dissassembly of Enclosed Spring Trip Canister COULD result in DEATH OR SERIOUS INJURY.

FIGURE 5-3 – Enclosed Spring Trip Adjustment

TABLE 5-3 – External Compression Trip Assembly, Parts List

Item Number	Qty.	Part Number	Description
1	1	1300-A1596	ECT Weldment, Circle Pushframe End
2	1	1300-A1597	ECT Weldment, Moldboard End
3	1	7070025	Spring
4	2	1300-1543	Spring Compression Block
5	1	7020288	Bolt, 5/8-11 x 2.5 Gr. 8
6	1	7030084	Toplock Nut, 5/8-11 Gr. 8
7	2	7050100	Clevis Pin, 1 x 2.75
8	2	7050003	Cotter Pin, 3/16 x 2"
9	2	7040013	Flat Washer, 1" Heat Treated, SAE YZ

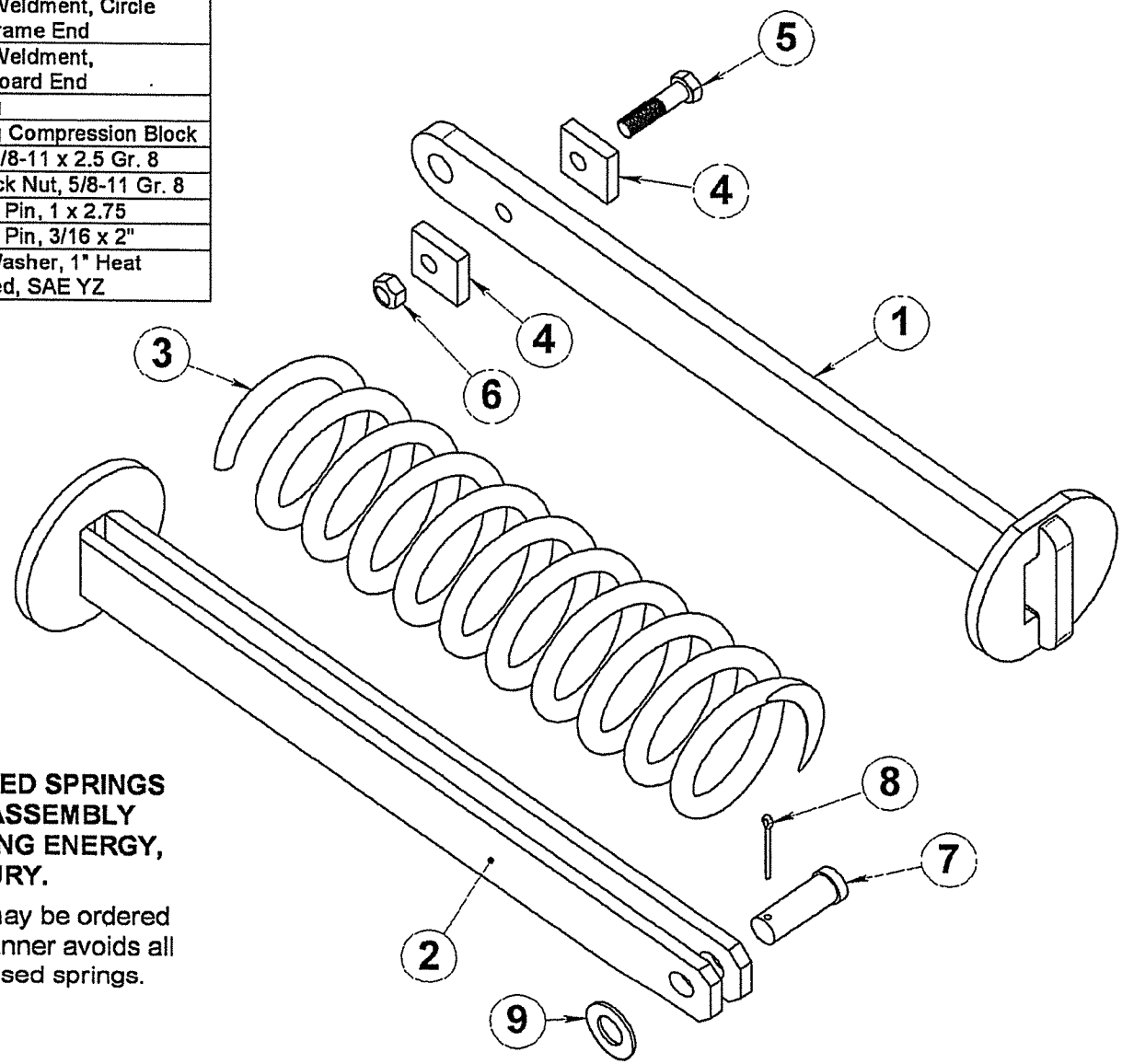

WARNING:

THIS ASSEMBLY CONTAINS PRESTRESSED SPRINGS UNDER COMPRESSION. IMPROPER DISASSEMBLY MAY CAUSE SUDDEN RELEASE OF SPRING ENERGY, WHICH COULD RESULT IN SERIOUS INJURY.

Note: Entire assembly, less items 7 thru 9, may be ordered as Part No. 1300-A1598. Ordering in this manner avoids all disassembly and assembly involving prestressed springs.

FIGURE 5-4 – External Compression Trip Assembly (ECT)

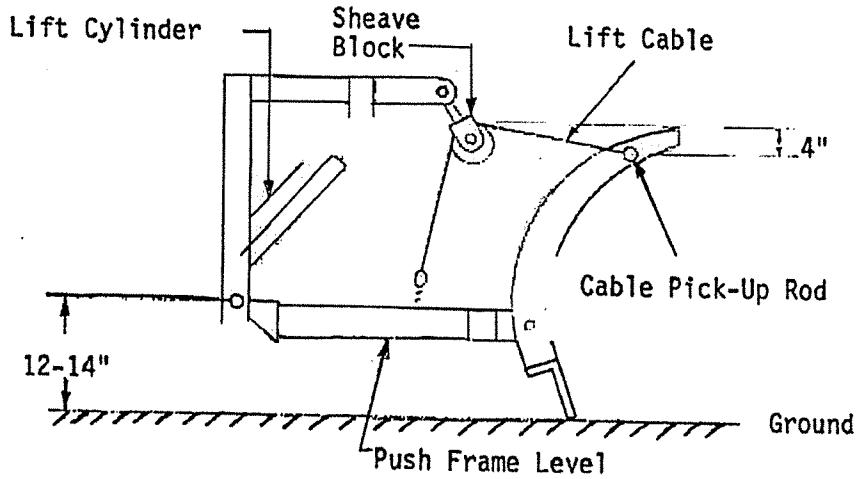

CAUTION: A wire is wrapped around this assembly for shipping. Be sure to remove before using plow.

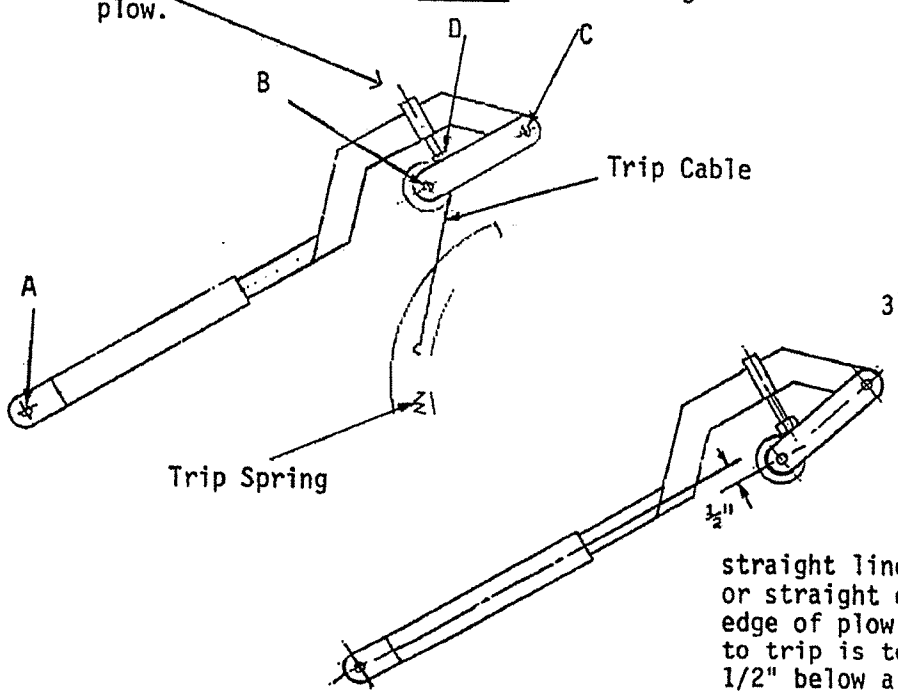

1) It is important that the hitch pin holes on the truck be approximately 12-14" off the ground. This makes the plow push frame nearly level and will result in the best plowing and tripping position for the plow.

2) After the plow is pinned to the hitch on the truck, hook the sheave block into the swivel hook on the end of lift arm and shorten lift cable until there is just enough slack to hook and unhook sheave block when lift arm is down. The top of the sheave should be 4" vertically higher than the pick-up point on the plow moldboard. Adjust the cable length and lift arm relationship so this 4" dimension is obtained when plow is down and cable is taut. If sheave is too low, the plow will trip too hard. If sheave is too high, the plow will trip too easily and will not readily return to plowing position after tripping. If the sheave cannot be adjusted to the proper height as suggested above, it will be necessary to relocate pick-up rod on moldboard. Always test the tripping action before rewelding the pick-up rod on solid. Keep in mind that as the cutting edge wears down, the plow will trip harder. A 6" cutting edge will trip harder than an 8" cutting edge because there is less tripping leverage.

3) It is necessary to use a single-acting lift cylinder to prevent slack in lift cable and subsequent damage to plow when tripped. Properly adjusted lift cable and ram will raise plow over obstacles when tripped.

4) To adjust trip to proper tension, the following steps must be taken: 1) Pivot points A, B and C must never be in a straight line, otherwise moldboard will not trip. Use string or straight edge to align. Find suitable curb to push cutting edge of plow against to check tripping action. 2) If pressure to trip is too much, adjust screw "D" out until point "B" is 1/2" below a straight line between "A" and "C".

FIGURE 5-5 – Standard Mechanical Trip Assembly

TABLE 5-4 – Standard Mechanical Trip Assembly, Parts List

Item No.	Qty.	Part No.	Description
1	1	139-0010	Lower Trip Assembly
2	1	139-0009	Upper Trip Assembly
3	1	7050017	Hair Pin, #11, .125 x 2.65
4	1	1300-0232	Spacer
5	1	7020080	Hex Capscrew, 3/4-10 x 3 GR. 8
6	3	7040021	Lock Washer, 3/4
7	3	7030013	Nut, 3/4-10 GR. 8
8	1	7020082	Hex Capscrew, 3/4-10 x 3.5 GR. 8
9	1	7030014	Jam Nut, 3/4-10
10	1	7060190	Cable, .375 x 22"
11	1	7070008	Extension Spring
12	1	7060008	Wire Rope Wedge, 3/8
13	1	1300-0406	Cable, 1/2"
14	2	7060013	Cable Thimble, 1/2
15	6	7060012	Cable Clamp, 1/2
16	1	7020162	Hex Capscrew, 5/8-11 x 3 GR. 8
17	1	7030010	Nut, 5/8-11 GR. 8
18	1	7040020	Lock Washer, 5/8
19	1	139-0011	Swivel Lift Assembly
20	1	1300-0062	Sheave
21	1	7020083	Hex Capscrew, 3/4-10 x 4 GR. 8
22	1	7020074	Hex Capscrew, 3/4-10 x 2 GR. 8
23	1	139-0008	SMT Trip Lock Assembly
24	1	139-0075	Lift Eye Assembly
25	2	139-0711	Stop Collar Assembly
26	2	7020029	Hex Capscrew, 3/8-16 x 1" GR. 5
27	1	7060035	Shackle, 1/2 3-ton, round pin
28	1	7060039	Chain, 7/16 GR. 70
29	1	7050018	Hitch Pin, .5 x 4 Grip

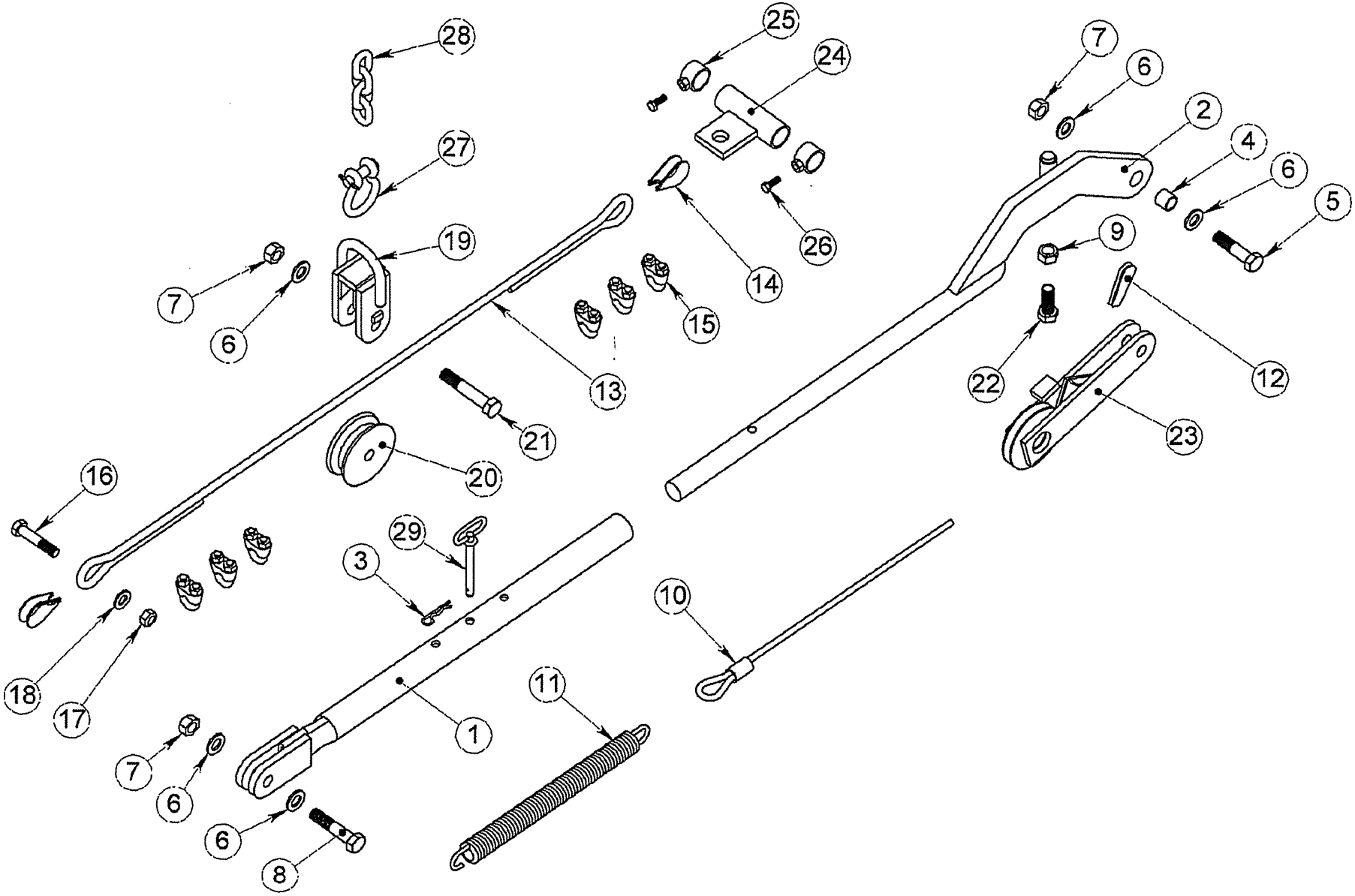

FIGURE 5-6 – Standard Mechanical Trip Assembly

TABLE 6-1 –Universal Quick Hitch, Parts List

Item No.	Qty.	Part No.	Description
1	1	149-0209	UQH Plow Portion Weldment
2	1	1400-0426	Lever Left
3	1	1400-0427	Lever Right
4	2	1400-0552	Latch Adjuster
5	2	7020060	Hex Capscrew, 5/8-11 X 2.00 GR. 8
6	2	7030084	Toplock Nut, 5/8-11 GR. C
7	4	7040006	Flat Washer, 5/8 Hardened, SAE
8	1	7050017	Hair Pin, .125 X 2.65
9	2	7050044	Cotter Pin, 1/8 X 1
10	2	7070026	Adjusting Yoke
11	6	7030008	Hex Nut, 1/2-20
12	1	7050127	Hitch Pin, .5 X 5 Grip
13	2	7050009	Clevis Pin, .50 X 1.50
14	4	7040042	Flat Washer, 1/2 Hardened, SAE
15	2	7070099	Spring, 2.75in
16	2	7030091	Nylock Nut, 1/2-20

Assembly and Adjustment Instructions:

1. Install levers (items 2 & 3) using hardware indicated. Check handle function. If mechanism is tight, loosen locknuts just enough to allow smooth operation.
2. Install both lever-to-jaw linkages using hardware shown.
3. Adjust linkages (see "Linkage Adjustment View" below): With handle pinned in "closed" position (towards plow) and latch assembly. (149-0288) resting against top of jaw assy. (149-0210), tighten nuts (item 16) on springs to compress springs approximately 1/4" (compressed spring length = 2.50"). After adjusting spring, back-off both nuts (item 11) from levers (items 2 & 3) 1/16" and tighten.

NOTE: Entire Assembly Shown May Be Ordered as 149-0208.

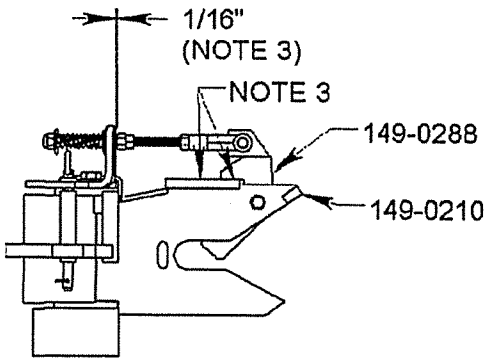

Linkage Adjustment View

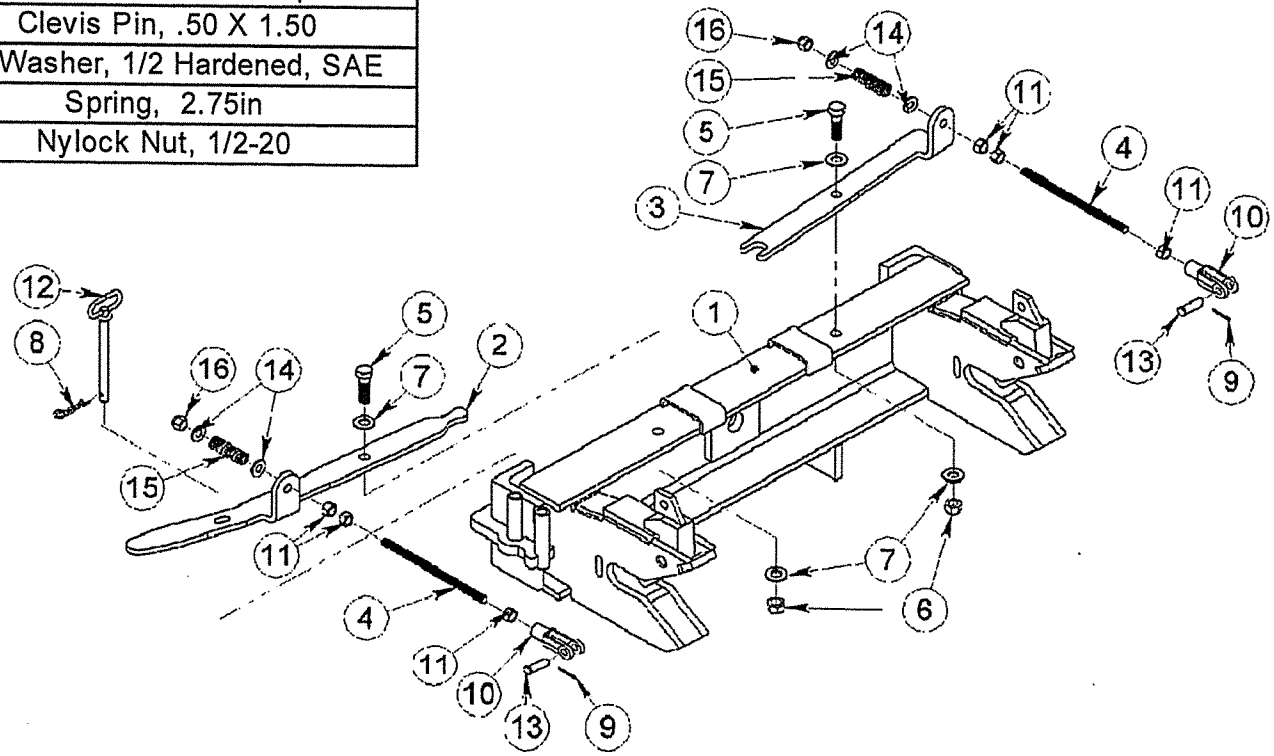

FIGURE 6-1 –Universal Quick Hitch, (UQH)

FIGURE 6-2 – Swivel Plates & Plow Hitches

Many different types of swivel plates and plow hitches are available. Samplings are shown below. Please call Henke Manufacturing for part numbers.

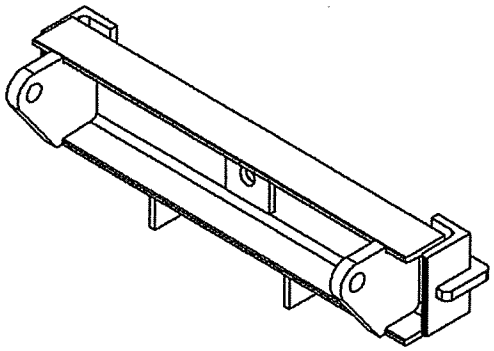

Swivel Plates with Standard Ears

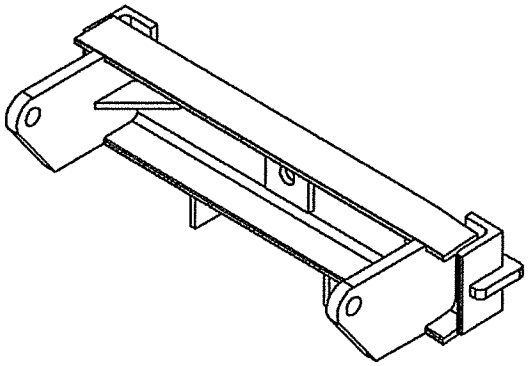

Swivel Plates with Long Ears

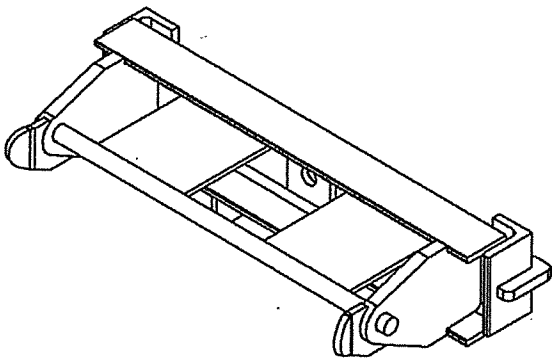

Quick-Link Style Swivel Plate
(299-0022)

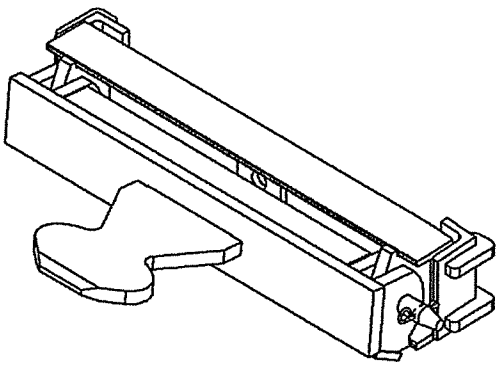

Arrowhead Style Plow Portion
(6101009)

NOTES: Please see Figure 6-1 for UQH Plow Portion.

Universal pin-on type swivel plates are available in various widths, hole sizes, and ear lengths.

TABLE 7-1 – Cutting Edges

6" STEEL	1/2" THICK	5/8" THICK	3/4" THICK
2FT.	Call	7150119	7150189
3FT.	7150153	7150120	7150073
4FT.	7150154	7150129	7150072
5FT.	7150007	7150184	7150026
6FT.	Call	Call	7150004
7FT.	Call	Call	7150028
8FT.	7150172	Call	Call
9FT.	Call	Call	7150036
10FT.	7150008	7150090	7150197
11FT.	7150009	7150089	7150031
12FT.	7150010	7150082	7150032

CP 6" STEEL	1/2" THICK	5/8" THICK	3/4" THICK
3FT.	7150186	Call	Call
4FT.	7150187	Call	Call

CP 10" STEEL	1/2" THICK	5/8" THICK	3/4" THICK
10FT.	Call	Call	7150050

CARBIDE	3/4" THICK
3FT.X5" TALL	Call
3FT.X6" TALL	7150035
3FT.X8" TALL	7150163
4FT.X5" TALL	7150123
4FT.X6" TALL	7150025
4FT.X8" TALL	7150164
5FT.X8" TALL	7150097
6FT.X6" TALL	7150124

8" STEEL	1/2" THICK	5/8" THICK	3/4" THICK
2FT.	7150039	7150077	Call
3FT.	7150037	7150078	Call
4FT.	7150038	7150079	Call
5FT.	7150011	Call	7150054
6FT.	7150005	7150081	7150055
8FT.	7150012	Call	7150042
9FT.	7150013	7150045	7150046
10FT.	7150014	7150043	7150047
11FT.	7150015	7150040	7150048
12FT.	7150016	7150044	7150049

CP 8" STEEL	1/2" THICK	5/8" THICK	3/4" THICK
3FT.	7150021	Call	Call
4FT.	7150022	Call	Call
10FT.	7150017	Call	7150171
11FT.	7150018	7150169	Call
12FT.	7150019	7150056	Call

RUBBER Notes 5&6	1 ½" THICK X10" Tall CP	RETAINING STRIP
8FT.	3500-0008	3500-0026
9FT.	3500-0009	1300-2223
10FT.	3500-0010	1300-0394
11FT.	3500-0011	1300-0395
12FT.	3500-0012	1300-0396
14FT.	3500-0014	1300-0401
16FT.	3500-0016	1300-0402

SNOW BASKET	1" THICK X10" Tall CP
8FT.	7150052
9FT.	7150053
10FT.	7150088

NOTES:

1. For Cutting Edges Not Listed Call Henke Manufacturing at 1-888-682-9010.
2. Except as noted, all cutting edges have 1.5" gauge line (distance from top edge to center of holes)
3. "CP" = Center Punched
4. All edges shown are punched for 5/8" bolts.
5. For rubber cutting edges, 6" tall center punched steel edges, Items 7150186 & 7150187 may be used to provide proper support behind the rubber edge.
6. Henke's rubber cutting edges feature a minimum tensile strength of 2000 psi and a maximum DIN rating of 150, and last much longer in service than lower quality rubber cutting edges available from some other suppliers.
7. Polyurethane cutting edges also available - call for price and availability.

TABLE 7-2 – Cutting Edge Hardware

TYPE	LENGTH	PART NO.	USES/NOTES
PLOWBOLTS 5/8-11 GRADE 8	2" 2 ½" 3" 3 ½" 4" 4 ½" 5" 6"	7150001 7150003 7150002 7150103 7150105 7150106 7150108 7150107	FOR STANDARD CUTTING EDGES AND WEAR GUARDS
CARRIAGE BOLTS 5/8-11 GRADE 8	3" 4" 5" 6"	7020280 7020287 7020359 7020363	FOR SOME WRAPAROUND CURB GUARDS (SQUARE HOLES, NOT COUNTER SUNK)
HEX BOLTS	4" 4 ½" 5"	7020064 7020128 7020295	RUBBER AND POLY CUTTING EDGES (USE NYLOCK NUTS ONLY)
TOPLOCK NUT 5/8-11 GRADE C	N/A	7030084	USE WITH STEEL OR CARBIDE CUTTING EDGES
NYLOCK NUT 5/8-11 GRADE 8	N/A	7030095	USE WITH RUBBER OR POLY CUTTING EDGES

TABLE 7-3 – Henke Curb Guards & Wear Guards

Wrap-Around Curb Guards, Steel

	7150122	6", Left
	7150121	6", Right
	7150117	8", Reversible

Wrap-Around Curb Guards, Chrome-Carbide Weld Deposit on Wrap-Around Corner

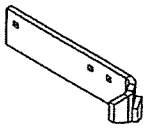	7150125	6", Left
	7150126	6", Right
	7150115	8", Left
	7150118	8", Right

Wrap-Around Curb Guard + Wear Guard,
Chrome-Carbide Weld Deposit on Wrap-Around Corner + on Bottom Wear Edge

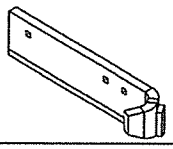	7150113	6", Left
	7150114	6", Right
	7150130	8", Left
	7150131	8", Right

Bolt-On Curb Guards (Bolts to Outside of End Rib)

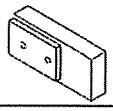	139-1046	Bolt-On Guard Assy.
	1300-1633	Optional spacer (Required for Tripedge applications)

<u>Henke Wear Guards and Wear Shoes</u>

Wear Guards, Standard Length (9"), with Chrome-Carbide Weld Deposit
(Mount in front of cutting edge)

	7140106	6", Reversible
	7140107	8", Reversible

Wear Guards, Long Length (21"), with Chrome-Carbide Weld Deposit
(Mount in front of cutting edge)

	7140108	6", Reversible
	7140008	8", Reversible

Cast Wear Shoes
(Mount behind cutting edge)

	7140004	Wear shoe for 6" cutting edges, or 8" center-punched edges
	7140002	Wear shoe for 8" cutting edges

Bottom Angle Saver (Mount behind of Bottom Angle)

	199-0280	Bottom Angle Saver with Carbide Strip

HENKE
LIMITED WARRANTY

1. LIMITED WARRANTIES

1.01. Henke warrants for one year from the purchase date to the original non-commercial, governmental, or municipal purchaser ("Purchaser") and warrants for twelve months to the original commercial or industrial purchaser

1.02. Manufacturer will repair or replace for the Purchaser any part or parts found, upon examination at one of its factories, to be defective under normal use and service due to defects in material or workmanship.

1.03. This limited warranty does not apply to any part of the goods which has been subjected to improper or abnormal use, negligence, alteration, modification, or accident, damaged due to lack of maintenance or use of wrong fuel, oil, or lubricants, or which has served its normal life. This warranty does not include normal wear items such as cutting edges, wear guards, scarifier teeth, etc. or improper installation. HMC warranty for any purchased components, such as hydraulic cylinders will be superceded by, and equal to the component manufacturer warranty.

1.04. Except as provided herein, no employee, agent, Dealer, or other person is authorized to give any warranties of any nature on behalf of Manufacturer.

2. REMEDIES AND PROCEDURES.

2.01. Warranty claims must be filled within 30 days of repair work during the one year warranty period and will be honored only if the completed warranty registration form has been returned. Henke reserves the right to require proof of purchase of original Henke replacement parts. If warranty is approved any allowed shipping expenses will be based on and will not exceed standard base shipping charges.

2.02. Purchaser claims must be made in writing to the Authorized Dealer ("Dealer") from whom Purchaser purchased the goods or an approved Authorized Dealer ("Dealer") within 30 days after Purchaser learns of the facts on which the claim is based.

2.03. Purchaser is responsible for returning the goods in question to the Dealer.

2.04. If after examining the goods and/or parts in question, Manufacturer finds them to be defective under normal use and service due to defects in material or workmanship, Manufacturer will:

(a)Repair or replace the defective goods or part(s) or

(b)Reimburse Purchaser for the cost of the part(s) and reasonable labor charges (as determined by Manufacturer) if Purchaser paid for the repair and/or replacement prior to the final determination of applicability of the warranty by Manufacturer.

The choice of remedy shall belong to Manufacturer.

2.05. Purchaser is responsible for any labor charges exceeding a reasonable amount as determined by Manufacturer and for returning the goods to the Dealer, whether or not the claim is approved. Purchaser is responsible for the transportation cost for the goods or part(s) from the Dealer to the designated factory.

3. LIMITATION OF LIABILITY.

3.01. MANUFACTURER DISCLAIMS ANY EXPRESS (EXCEPT AS SET FORTH HEREIN) AND IMPLIED WARRANTIES WITH RESPECT TO THE GOODS INCLUDING, BUT NOT LIMITED TO, MERCHANTABILITY AND FITNESS FOR A PARTICULAR PURPOSE.

3.02. MANUFACTURER MAKES NO WARRANTY AS TO THE DESIGN, CAPABILITY, CAPACITY, OR SUITABILITY FOR USE OF THE GOODS.

3.03. EXCEPT AS PROVIDED HEREIN, MANUFACTURER SHALL HAVE NO LIABILITY OR RESPONSIBILITY TO PURCHASER OR ANY OTHER PERSON OR ENTITY WITH RESPECT TO ANY LIABILITY, LOSS, OR DAMAGE CAUSED OR ALLEGED TO BE CAUSED DIRECTLY OR INDIRECTLY BY THE GOODS INCLUDING, BUT NOT LIMITED TO, ANY INDIRECT, SPECIAL, CONSEQUENTIAL, OR INCIDENTAL DAMAGES RESULTING FROM THE USE OR OPERATION OF THE GOODS OR ANY BREACH OF THIS WARRANTY. NOT WITHSTANDING THE ABOVE LIMITATIONS AND WARRANTIES, MANUFACTURER'S LIABILITY HEREUNDER FOR DAMAGES INCURRED BY PURCHASER OR OTHERS SHALL NOT EXCEED THE PRICE OF THE GOODS.

3.04. NO ACTION ARISING OUT OF ANY CLAIMED BREACH OF THIS WARRANTY OR TRANSACTIONS UNDER THIS WARRANTY MAY BE BROUGHT MORE THAN TWO (2) YEARS AFTER THE CAUSE OF ACTION HAS OCCURRED.

4. MISCELLANEOUS.

4.01. Proper Venue for any lawsuits arising from or related to this limited warranty shall be only in Leavenworth County, Kansas.

4.02. Manufacturer may waive compliance with any of the terms of this limited warranty, but no waiver of any terms shall be deemed to be a waiver of any other term.

4.03. If any provision of this limited warranty shall violate any applicable law and is held to be unenforceable, then the invalidity of such provision shall not invalidate any other provisions herein.

4.04. Applicable law may provide rights and benefits to purchaser in addition to those provided herein.

KEEP FOR YOUR RECORDS

ATTENTION: Purchaser should fill in the blanks below for his reference when buying repair parts and/or for proper machine identification when applying for warranty.

Henke Implement Model _____ Serial Number _____

Date Purchased _____ Dealer _____

ATTENTION:

READ YOUR OPERATOR'S MANUAL

HENKE MANUFACTURING
An Alamo Group Company
3070 Wilson
Leavenworth, KS 66048
888-682-0300

Dealer Warranty Procedure

For units delivered within the past 12 months, report any warranty problems needing repair to our Product support department. Please have information ready regarding:

1. Henke unit model and serial number,
2. Model of equipment Henke unit is attached to (prime mover)
3. Description of the problem and any helpful information by the end user. (Photos are always helpful).

Measurements or photos may be requested by Henke engineering for any issues regarding prime mover proximity and clearance, or any other unique considerations of fit and adaptability. These may be necessary for a proper repair recommendation and procedure.

Henke will respond with a written labor hour allowance for Henke participation on a faxed claim form and will ship any required replacement parts. If necessary, a repair procedure will be included on the claim form. A parts invoice will be generated to confirm shipment of the replacement parts.

If defective parts are needed for analysis, Henke will request their return.
Any such returned items are to be labeled with the **claim number** and returned to:

Henke Manufacturing Corp.
ATTN: Product Support
3070 Wilson Ave.
Leavenworth, KS. 66048
RGA#_____

The dealer should perform repairs as agreed on a dealer warranty repair order. Return the claim form with a copy of the dealer warranty repair order and service report. Credit as agreed will be issued to the dealer upon receipt of the dealer warranty repair order invoice (Pro-forma invoice), and upon receipt, inspection and warranty confirmation of the returned parts if any.

Parts & Service Assistance

Parts and service assistance is available, Monday through Friday, from **8:00 am** to **5:00 pm, CST. Call 913-682-9000.**

Our web site, **www.henkemfg.com**, is a quick source for parts pricing, and many common parts diagrams.

Parts purchase orders may be faxed in at any time to **913-682-0300**. Faxed orders are encouraged, as they help insure order accuracy and follow up. Include any special instructions, such as drop ship addresses on your order.

Agenda Item # 6j

Board of Commissioners
Clatsop County

AGENDA ITEM SUMMARY

December 14, 2016

Issue/Agenda Title: Purchase of Kenworth Truck Chassis with Hook Lift and Attachments

Category: Consent Calendar

Prepared By: Ted McLean, Assistant Public Works Director

Presented By: Michael Summers, Public Works Director

Issue before the Commission: Approve purchase of 2018 Kenworth Chassis, Stellar Hook Lift and Attachments from PAPE Kenworth.

Informational Summary: The Public Works Department has budgeted $380,000.00 for the purchase of Equipment.

This single truck with the Hooklift system comes with a 3500 Gal. water tank, 12 yard dump box, 2- 30 yard brush handling boxes and a flatbed for moving materials and equipment. This truck will take the place of #224 Peterbilt Water Truck. The water truck is an integral part of our road maintenance and construction equipment. Its use includes watering for gravel road maintenance, watering for construction projects, culvert cleaning and emergencies such as road cleaning and fire suppression. With this new system this single truck will also be able to transport materials with the dump box and brush box as well as move equipment and materials with the flat bed. This truck will greatly increase our efficiencies as well as lesson the overall footprint of our equipment.

Purchase price for the Hook lift truck is $241,757.00, trade in #224 Water Truck- $25000.00

Total price $216,757.22

The Public Works Department has made comparisons with several different truck Mfg., Kenworth, Peterbilt and Volvo, Mack. (Our large truck fleet currently is Peterbilt)

We have chosen the Kenworth for several reasons:

#1- Peterbilt cannot supply a warrantied frame extension for plowing.

#2- Kenworth and Peterbilt share many of the same parts and supplies that are currently stocked by our shops. Other Truck Mfg's supply different engines and transmissions as well as suspensions that would require more training for our shop as well as storage of supplies.

#3- Kenworth was a little more cost initially but they gave us better trading values for the overall lowest bid price.

#4 Kenworth gives us the best severe duty cab and chassis for on and off road use and longevity.

PAPE Kenworth is using a nationwide contract called NJPA. This contract has been advertised in Oregon and complies with the State of Oregon purchasing requirements.

Fiscal Impact: This purchase was budgeted in the Roads Equipment Replacement Fund.

Options to Consider:

1. Approve purchase of the 2018 Kenworth Hook Lift Truck
2. Look for other truck options
3. Keep fleet as is

Staff Recommendation: Option #1

Recommended Motion: *"I move to approve the purchase of the 2018 Kenworth Hook Lift Truck and attachments from PAPE Kenworth and to declare surplus #224 Peterbilt Water Truck.*

Attachment List:

A- 2018 Kenworth truck with Hook Lift Specs

B- NJPA contract number 081716-KTG and reference material

PAPÉ KENWORTH

KENWORTH

CUSTOMER TRUCK SALES ORDER

SIC Code:

INVOICE ADDRESS	Buyer Name Clatsop County Roads	DELIVERY ADDRESS	Name
Address 1100 Olney Ave		Address	
City Astoria	State OR Zip 97103	City	State Zip
Phone	Fax	Phone	Fax
PO No.	Delivery/F.O.B. Customer	Est. Delivery Date March 2017	

EQUIPMENT	Yr/Make 2018 Kenworth	Mileage	NEW	USED
	Model T800	VIN No.	☑	☐

Description:			$122,498.00
T800 Hook Lift Chassis			
NJPA Contract# 081716-KTG			
☐ See attached Kenworth Vehicle Summary or Addendum			
Additional Equipment/Accessories	Cost		
Sourced Goods Includes the following	$119,259.22	Add'l Equipment Sales Price	$119,259.22
15/20 Cubic drop box , 30 Cubic drop box ,Upgrade floor and add radius walls, 19' Flatbed		Transportation Charges	
Randco 17' SS Water Tank		Federal Excise Tax	
Stellar Hooklift Model 190-24-52		State Sales Tax %	$0.00
TRADE Yr/Make 1985 Peterbilt	☐ See attached Addendum	Misc. Document/License Fee	
Model 359		Less Net Trade-In Allowance	$25,000.00
VIN No. FP190002		Total Differential Price	$216,757.22
Lienholder N/A	Mileage 291153	Less Deposit with Order	
Trade In Allowance $25,000.00	Less (Est.) Payoff $0.00	Balance Due on Delivery	$216,757.22

* The Sales Price shown in this order will be adjusted by the same increase or decrease as any increase or decrease in Dealer's factory list prices and any increase or decrease in transportation costs between today's date and the date of delivery.

WARRANTY	
	☑ NEW STANDARD KENWORTH CHASSIS
	☐ VENDOR NEW EXTENDED (describe)
	☐ VENDOR NEW EXTENDED (describe)
	☐ USED (describe)
	☐ AS IS / NO WARRANTY Buyer Initial: _____

A heavy-duty tractor and 53-foot or longer box-type trailer operated in California may be subject to the California Air Resources Board Heavy-Duty Vehicle Greenhouse Gas Emission Reduction measure. These vehicles may be required to use low-rolling resistance tires and meet aerodynamic equipment requirements to reduce greenhouse gas emissions. For more information, please visit the California Air Resources Board website at http://www.arb.ca.gov/cc/hdghg/hdghg.htm.

If trade-in, Buyer certifies that there is no lien of any kind and that the Trade is free and clear and is his sole and absolute property except as noted above. The undersigned Buyer places a firm order.

PAPÉ KENWORTH	BUYER
Store Pape Kenworth	
City Portland State OR Zip 97211	By _____ Title _____
By Scott Sauer Title Territory Manager	By _____ Title _____
Date 11-29-2016	Date

Western Cascade Container LLC

PO Box 818
Kelso, WA 98626
Physical: 1808 Baker Way Kelso, WA 98626
Phone: 360-577-1377
Fax: 360-577-1388
www.westerncascade.net

CONFIDENTIAL QUOTATION

Date:	5/31/2016		Quote #:	WCCQ16163R4
To:	PAPE KENWORTH	FOR CLATSOP COUNTY PW	Phone:	503-329-9377
	550 NE COLUMBIA BLVD	REVISED 11/21/16	Email:	ssauer@papekenworth.com
	PORTLAND, OR 97211		Terms:	SEE BELOW
Attn:	SCOTT SAUER		Page:	1 OF 3

QUANTITY:	DESCRIPTION:	PRICE EA:	SUBTOTAL:
2	30-CUBIC YARD OPEN TOP RECT DROP BOX	$ 6,579.00	$ 13,158.00
	LENGTH: 20' WALL HT: 66" ID		
	WALL MATERIAL: 12GA		
	FLOOR MATERIAL: 10GA		
	STANDARD DOUBLE DOORS W/ T-BAR LATCH		
	HAULER: STELLAR HOOKLIFT 190-24-52		
	PAINTED: ONE COLOR (INDUSTRIAL ENAMEL)		
1	FLATBED - HEAVY DUTY	$ 6,940.00	$ 6,940.00
	LENGTH: 19' DECK + 24" TAPERED BEAVERTAIL - OVERALL LENGTH 21'		
	DECK MATERIAL: 2" X 6" T & G SELECT FIR		
	HEADBOARD MATERIAL:		
	BOTTOM 1/3: 10GA TOP 2/3" EXPANDED METAL		
	STAKE POCKETS ON 24" CENTERS ALONG BOTH SIDES		
	CROSSMEMBERS ON 12" CENTERS		
	HAULER: STELLAR HOOKLIFT 190-24-52		
	PAINTED: ONE COLOR (INDUSTRIAL ENAMEL)		
	(4) SIDE-MOUNT STRAP WINCH & "J" HOOK		
	(2) HEADBOARD MOUNTED TOOL BOXES W/ LOCKABLE LID		
	(6) 3-WAY CHAIN SLOTS IN DECK		
	** ABOVE PRICING DISCOUNTED FOR CASH / CHECK PAYMENT*	PAGE TOTAL:	$ 20,098.00

SIGNATURE: _____

Western Cascade Container LLC

PO Box 818
Kelso, WA 98626
Physical: 1808 Baker Way Kelso, WA 98626

Phone: 360-577-1377
Fax: 360-577-1388
www.westerncascade.net

CONFIDENTIAL QUOTATION

Date:	5/31/2016		Quote #:	WCCQ16163R4
To:	PAPE KENWORTH	FOR CLATSOP COUNTY PW	Phone:	503-329-9377
	550 NE COLUMBIA BLVD	REVISED 11/21/16	Email:	ssauer@papekenworth.com
	PORTLAND, OR 97211		Terms:	SEE BELOW
Attn:	SCOTT SAUER		Page:	2 OF 3

QUANTITY:	DESCRIPTION:	PRICE EA:	SUBTOTAL:
1	15 / 20-CUBIC YARD OPEN TOP SEMI TUB STYLE DUMP BOX	$ 9,017.00	$ 9,017.00
	LENGTH: 20' WALL HT: 35" ID TO STEEL WALL / 47" W/ SIDEBOARDS		
	WALL MATERIAL: 3/16" PLATE		
	FLOOR MATERIAL: 1/4" PLATE		
	PNEUMATIC HIGH-LIFT TAILGATE WITH PNEUMATIC LATCH		
	HAULER: STELLAR HOOKLIFT 190-24-52		
	CROSSMEMBERS ON 24" CENTERS		
	PAINTED: ONE COLOR (INDUSTRIAL ENAMEL)		
1	OPTION: UPGRADE FLOOR MATERIAL TO AR400	$ 875.00	$ 875.00
1	OPTION: UPGRADE TO RADIUS WALLS IN LIEU OF SEMI-TUB STYLE	$ 489.00	$ 489.00
	** ABOVE PRICING DISCOUNTED FOR CASH / CHECK PAYMENT*	PAGE TOTAL:	$ 10,381.00

SIGNATURE: _____

Western Cascade Container LLC

PO Box 818
Kelso, WA 98626
Physical: 1808 Baker Way Kelso, WA 98626
Phone: 360-577-1377
Fax: 360-577-1388
www.westerncascade.net

CONFIDENTIAL QUOTATION

Date:	5/31/2016		Quote #:	WCCQ16163R4
To:	PAPE KENWORTH	FOR CLATSOP COUNTY PW	Phone:	503-329-9377
	550 NE COLUMBIA BLVD	REVISED 11/21/16	Email:	ssauer@papekenworth.com
	PORTLAND, OR 97211		Terms:	SEE BELOW
Attn:	SCOTT SAUER		Page:	3 OF 3

QUANTITY:	DESCRIPTION:	PRICE EA:	SUBTOTAL:
1	RANDCO WATER TANK - 17' MEDIUM 3500 (APPROX) GALLON	$ 31,325.00	$ 31,325.00
	TO FIT HOOKLIFT SYSTEM		
	3/16" STEEL SKIN, 1/4" STEEL SUBFRAME MOUNTED TO		
	STELLAR HOOKLIFT SUBFRAME, ANTI-SKID LADDER, (2) EYE LIFTS,		
	2.5" HYDRANT FILL WITH FLAPPER PLATE AND 6" AIR GAP,		
	24" X 24" MANHOLE WITH LID, TANK WITH REAR PLATFORM,		
	4X4 BERKELEY SELF-PRIMING PUMP, INLET SUMP, HYDRAULIC MOTOR		
	WITH QUICK CONNECT HYD. LINES TO REAR TRUCK CONNECTIONS,		
	REAR SPRAY BAR, SIDE SPRAY INSTALLED, FRONT SPRAY BAR KIT (IN		
	KIT FORM), CAB CONTROLLED ELECTRIC TOGGLE SWITCHES WITH		
	ELECTRIC OVER AIR SOLENOIDS, SELF-LOADING PLUMBING VALVES,		
	(2) 10' SUCTION HOSES AND FOOTVALVE, STORAGE TUBES IN		
	FENDERS, FENDERS INSTALLED (MEASUREMENT FOR PLACEMENT),		
	MUD FLAPS, (2) VIEW TUBES (1-FRONT, 1-REAR)		
	TANK PAINTED WHITE		
	1.5" X 50' HOSE REEL (HOSE, REEL, NOZZLE) MANUAL INSTALLED		
	INTERIOR EPOXY COATING		
1	OPTION: STAINLESS STEEL TANK UPCHARGE - IN LIEU OF MILD STEEL	$ 8,800.00	$ 8,800.00
	INCLUDES DEDUCTION FOR INTERIOR EPOXY COATING		

ABOVE PRICING DOES NOT INCLUDE FET OR ANY TAXES - THIS UNIT IS QUOTED FOR RESALE - PAPE KENWORTH IS RESPONSIBLE FOR COLLECTING THE 12% F.E.T. TAX AND SALES TAX IF APPLICABLE.

TERMS: PAYMENT TO BE MADE WITHING (2) DAYS OF PAYMENT BEING RECEIVED BY PAPE KENWORTH OR 10 BUSINESS DAYS FROM DELIVERY WHICH EVER IS FIRST.

	** ABOVE PRICING DISCOUNTED FOR CASH / CHECK PAYMENT*	PAGE TOTAL:	$ 40,125.00
		SUBTOTAL:	$ 70,604.00
		SALES TAX:	$ -
		FET 12%	$ -
		ORDER TOTAL:	$ 70,604.00

QUOTE GOOD FOR 30 DAYS — PRODUCTION TIME ESTIMATE: *TO BE DETERMINED*

FOB: Kelso, WA 98626 — SHIPPING METHOD: WILL CALL

All above prices are discounted for cash or check payment.

An additional 3% credit card fee will be added if payment is made by credit card. We accept VISA, Mastercard & Discover.

* Due to the volatility of steel market, Western Cascade Container will absorb an increase in steel costs of up to 3%, however, any additional increase in steel cost will require us to requote your price.

**** Customer responsible for unloading product(s) from flatbed at delivery site.**

* Disclaimer of Warranties: Seller warrants all goods against defects in materials or workmanship, but makes no warranties of merchantability or fitness for any purpose. The seller assumes no responsibility for engineering on customer supplied drawings or specifications. The seller's warranty shall not apply to goods which have been altered, repaired, or misused by the buyer's personnel.

SIGNATURE: _____

KENWORTH

Pape Kenworth P255 **550 NE COLUMBIA BLVD** **PORTLAND, Oregon United States 97211** **Phone: (503) 240-6282** **Fax: (503) 345-6853** **Email:**	**Clatsop County Roads** **1100 Olney Ave** **Astoria, Oregon United States 97103** **Phone: (503) 325-9312** **Fax:** **Contact Email: TMclean@co.clatsop.or.us>** **Prepared for: Ted Mclean**

Vehicle Summary

Unit

Model:	T800 Series Conventional.
Type:	FULL TRUCK
Description:	2018 T800

Application

Intended Serv.:	Local pickup & delivery.
Commodity:	Vehicles which haul Other bulk goods

Body

Type:	Roll on/roll off
Length (ft):	24.0
Height (ft):	13.5
Max Laden Weight (lbs):	4000

Trailer

No. of Trailer Axles:	0
Type:	
Length (ft):	0.0
Height (ft):	0.0
Kingpin Inset (in):	0
Corner Radius (in):	0

Restrictions

Length (ft):	120
Width (in):	102
Height (ft):	13.5

Chassis

Fr Axle Load (lbs):	20000
Rr Axle Load (lbs)	46000
G.C.W. (lbs):	88000
Road Conditions:	
Class A (Highway)	90
Class B (Hwy/Mtn)	08
Class C (Off-Hwy)	02
Class D (Off-Road)	00
Maximum Grade:	6
Wheelbase (in):	274
Overhang (in):	67
Fr Axle to BOC (in):	74
Cab to Axle (in):	200
Cab to EOF (in):	267
Overall Comb. Length (in):	390

Special Req.

U.S. Domestic Registry, 50-State

Approved by: _____ **Date:** _____

Note: All sales are F.O.B. designated plant of manufacture.

PACCAR FINANCIAL

Ask your dealer for a quote today, or visit our website @ www.paccarfinancial.com.

PACCAR Financial offers innovative finance, lease and insurance programs customized to meet your needs.

Unpublished options may require review/approval.
Dimensional and performance data for unpublished options may vary from that displayed in PROSPECTOR.

Printed:	11/10/2016 12:08:33 PM	*Complete*	Model Number:	T800 Series Conventional.
Effective Date:	Jul 1, 2016		Quote/DTPO/CO:	Q84325077
Prepared by:	SCOTT SAUER		Version Number:	38.21

KENWORTH

Pape Kenworth P255 550 NE COLUMBIA BLVD	Clatsop County Roads 1100 Olney Ave
PORTLAND, Oregon United States 97211 Phone: (503) 240-6282 Fax: (503) 345-6853 Email:	Astoria, Oregon United States 97103 Phone: (503) 325-9312 Fax: Contact Email: TMclean@co.clatsop.or.us> Prepared for: Ted Mclean

	Description	Weight
Model		
	T800 Series Conventional. Elastomer bushed front spring pins & heavy-duty shock absorber brackets, 16mm. fasteners from rear cab support to end-of-frame, except tractor taper crossmember. Vinyl inside sunvisors, driver side includes strap & mirror, rider side includes strap; Under-dash center console w/ 2 cup holders, 2-12V outlets & a storage compartment, Glove box door with locking latch.	15,309
	T800: Sloped Hood.	0
	Chassis operation will not include a stationary application. Stationary operation is defined as running the engine under load while stationary at a substantial fraction of engine gross horsepower (60% or greater) for an extended period of time (longer than 5 - 10 minutes).	0
	CARB Idle Emissions Reduction Feature. Paccar MX engines - Low NOx Idle.	0
	Non-Sleeper w/rear axle capacity less than 59K.	0
	Other bulk goods	0
	Local pickup & delivery. Vehicles which haul freight, typically operating within a 100-mile radius, on public streets & highways, & other paved surfaces, including limited Class C roads. Includes package & freight delivery, as well as fuel oil or petroleum distribution, etc. Road usage: minimum 3% Class B, do not code for Class D.	0
	Roll on/roll off	0
	U.S. Domestic Registry, 50-State	0
Engine & Equipment		
	PACCAR MX-13 455 2013+ 455@1700 1650@1000 with engine brake. N08000 N219 0....Offset mode N08030 N224 2....Maximum Vehicle Speed Bonus N08040 N227 -2...Maximum Vehicle Speed Penalty N08190 N246 4....Minimum Vehicle Speed for DSA Activation N08200 N247 1....Lowest Gear that DSA will be active N08210 N248 18...Highest Gear that DSA will be active N09020 N170 70...Standard Maximum Speed Limit [LSL] N09030 N169 0....VSL Expiration Distance N09040 N162 70...Maximum Accelerator Pedal Vehicle Speed N09060 N163 0....Maximum Cycle Distance	0

Unpublished options may require review/approval.
Dimensional and performance data for unpublished options may vary from that displayed in PROSPECTOR.

Printed:	11/10/2016 12:08:33 PM	*Complete*	Model Number:	T800 Series Conventional.
Effective Date:	Jul 1, 2016		Quote/DTPO/CO:	Q84325077
Prepared by:	SCOTT SAUER		Version Number:	38.21

Description	Weight
N09070 N052 650..Engine Idle Speed N09100 N015 NO...Enable Retarder During Manual Transmission Gear Selection N09110 N019 0....Delay in Engine Brake Activation w/ Brake Pedal Depressed N09120 N014 2....Auto Retard Vehicle Speed Offset N09130 N013 4....Downhill Speed Limiter Vehicle Speed Offset N09140 N006 64...Max Cruise Speed N09150 N001 16...Minimum Speed to Turn Cruise Control Off N09160 N003 19...Minimum Cruise Control Speed N09170 N002 19...Min Speed to Automatically Turn Cruise Control On N09200 N039 OFF..Allow Multi-Torque Only When Cruise is Active N09210 N193 0....EIST Expiration Distance N09220 N188 5....Timer Setting Non-PTO Mode w/o Park Brake Set N09230 N187 5....Timer Setting Non-PTO Mode w/ Park Brake Set N09250 N190 YES..Reset EIST Timer Based on Engine Load N09260 N191 NO...Overrule EIST Timer Based on Engine Load - No Shutdown N09280 N186 5....Timer Setting When in PTO Mode N09290 N200 YES..Allow EIST Timer Overrules in PTO Mode N09300 N185 40...Low Ambient Temperature Overrule N09310 N184 80...High Ambient Temperature Overrule N09350 N197 YES..Enable Accelerator Pedal Reset N09360 N199 YES..Enable Clutch Pedal Reset N09370 N198 YES..Enable Service Brake Reset N09380 N071 ON...FIC Enable/Disable N09390 N072 1900.Maximum Fast Idle Control Engine Speed N09440 N080 1....PTO Vehicle Speed Limit N09450 N078 ON...PTO Mode Disabled w/ Clutch Pedal Depressed N09460 N101 ON...PTO Mode Disabled w/ Service Brake Depressed N09470 N079 ON...PTO Mode Enable Only w/ Parking Brake Set N09480 N089 ON...PTO Mode Enable Only w/ Transmission Neutral N09530 N110 ON...Enable Set Point w/ Set/Accel Switch Bump N09540 N087 780..RPM Set Point N09550 N086 2000.Maximum Engine Speed During PTO Operation N09600 N106 660..Minimum Engine Speed During PTO Operation N09640 N173 0....Reserve Speed Offset N09840 N179 YES..Enable Park Brake Reset N09880 N164 252..Reserve Speed Function Reset Distance N09900 N182 30...Coolant Temperature Overrule N09920 N073 Trq..Cab Accel Pedal Type in PTO Mode N09940 N055 780..RPM Set Point 1 N09960 N056 1030.RPM Set Point 2	
Prospector Version 38.2 Replaces version 38.1	0
Engine monitoring protection -Derate- PACCAR MX engine parameter.	0
Gearing Analysis: Performance power before economy results.	0
Customer's Typical Operating Spd: 60 MPH.	0

Unpublished options may require review/approval.
Dimensional and performance data for unpublished options may vary from that displayed in PROSPECTOR.

Printed:	11/10/2016 12:08:33 PM	*Complete*	Model Number:	T800 Series Conventional.
Effective Date:	Jul 1, 2016		Quote/DTPO/CO:	Q84325077
Prepared by:	SCOTT SAUER		Version Number:	38.21

Description	Weight
MX Retarder State Cruise Control On Latch Mode Selecting this code will program the engine controller to make latch mode available when cruise control is on, but not set, and the engine brake switch is on. Latch mode means the engine retarder is activated when the brake pedal is depressed and does not deactivate until the operator depresses the accelerator pedal. This sales code cannot be selected if either Code 5 or Code 6 are selected. 2013+	0
Enable MX Retarder Auto-Retard Selecting this code will program the engine to utilize the auto retard mode whenever cruise control speed has been set and the engine brake switch is on. The auto-retard mode will control the vehicle speed to an offset from the cruise control set speed via the engine retarder. The offset speed shall be dependent upon customer inputs via the electronic programming work screen. 2013+	0
PTO Speed control from cab station w/ o acc- -elerator pedal, PACCAR MX engine parameter.	0
Effective VSL Setting NA	0
Engine Idle Shutdown Timer Disabled	0
Enable EIST Ambient Temp Overrule	0
Eff EIST NA Expiration Miles Use only with MX and Cummins engines	0
Air compressor: WABCO 28 CFM PACCAR MX.	0
Air cleaner: Powercore engine mount 10 in. w/constant torque SS clamps, pop-up air restriction indicator. Holds 10% more fine dust than 2500. Pop-up indicator is standard.	0
Fan hub: Horton 2-Speed for PACCAR MX	0
Cooling module: T8SH/T8B/W9S 1440 square inches. Includes aluminum radiator core, aluminum charge air cooler, translucent surge tank and washer bottle, silicone hoses, and extended life coolant. Drain valve is not available w/Allison transmissions.	0
Radiator bug screen mounted between hood & grille.	2
RH under cab DPF/SCR w/ RH SOC vertical tailpipe. For use w/ daycabs, extended daycabs, or modular sleepers. T660 requires split fender hood.	0
Tailpipe: 5 in. single 30 in. 45 degree curved.	-1
PACCAR Fuel filter/water separator: return fuel heat w/integral thermostat. PACCAR MX 2013+	0
Immersion block heater 120V 1500W w/plug under door on C500, T660, T800 & W900.	2
Alternator: PACCAR 160 amp, brush type	0
Batteries: 3 PACCAR GP31 threaded post (700) 2100 CCA dual purpose.	0

Unpublished options may require review/approval.
Dimensional and performance data for unpublished options may vary from that displayed in PROSPECTOR.

Printed:	11/10/2016 12:08:33 PM	*Complete*	Model Number:	T800 Series Conventional.
Effective Date:	Jul 1, 2016		Quote/DTPO/CO:	Q84325077
Prepared by:	SCOTT SAUER		Version Number:	38.21

	Description	Weight
	Starter: PACCAR 12 volt electrical system. W/ centralized power distribution incorporating plug-in style relays. Circuit protection for serviceability, 12-volt light system w/circuit protection circuits number & color coded.	0
	Multi-function engine connector for body builder interface PACCAR MX engine only. T680/T880: This feature is standard, no code required.	0
	Connection between PTO switch & engine requires code 1900082 or 1900084. T680/T880: This feature is standard, no code required.	0
Transmission & Clutch		
	Forward Creep Mode Enabled	0
	Reverse Creep Mode Enabled	0
	Transmission: Eaton FO16E318B-MXP UltraShift Plus 18-speed w/Hill Start Aid feature. Standard with synthetic lubricant. This product should be used for heavy loads operating primarily on highway. C500, T660, T800 & W900 models utilize a cobrahead shift lever. *Torque Limit: 1650 pound-feet.	179
	Clutch:UltraShift Plus OR Fuller Advantage Series Automated transmissions.	0
	Driveline: 3 Dana SPL250XL W/ 2 centerbearings Requires 3500057 interaxle driveline. Low maintenance offering from Spicer. On-highway 350K mi first service interval, 100K mi subsequent service interval on U-joint, splines lubed for life for life, quick disconnect end caps.	185
	Chassis will be fitted w/LH transmission PTO. (PREVENTS ECU F/INTERFERING W/PTO ONLY)	0
	14 in. Eaton Fuller high capacity oil to water cooler standard for transmission 1550-2250 lb-ft, 18-speed AutoShift.	0
	Aluminum clutch housing replacing cast iron for engines w/torque ratings 1450 to 2050 lb-ft.	-52
Front Axle & Equipment		
	Dana Spicer D2000 Front Axle rated 20K standard track.	120
	Front Brakes: 22K Bendix ES S-cam 16.5x6 in.	-46
	Front dustshield: for drum brakes: all front axles.	6
	Front Brake Drum: 20,000 lbs. Meritor X30 light weight 16-1/2x6 in.	58
	Front Hubs Iron hub pilot 20,000 lbs. 10 Bolt 16.5x6in. or 7in. or air disc brakes. 10 Bolt, 11-1/4 in. bolt circle. Consider Wheelguards (5850002) with aluminum wheels.	80
	ConMet PreSet Plus Hub package; front axle.	0

Unpublished options may require review/approval.
Dimensional and performance data for unpublished options may vary from that displayed in PROSPECTOR.

Printed:	11/10/2016 12:08:33 PM	*Complete*	Model Number:	T800 Series Conventional.
Effective Date:	Jul 1, 2016		Quote/DTPO/CO:	Q84325077
Prepared by:	SCOTT SAUER		Version Number:	38.21

	Description	Weight
	Hubcap: front vented.	0
	Front Auto Slack Adjuster.	0
	Front Springs: Taperleaf 20K w/ shock absorbers w/ maintenance-free elastomer spring pin bushings. Standard with rubber pins except for C500 which has threaded pins. W900S only. Not available on W900L. W900B use 2866021.	241
	Dual power steering gears: 20K TRW TAS65.	60
	Power Steering Cooler:Radiator Mounted Air-to-Oil 2007 and later engines only.	11
	Threaded Bushings for taperleaf spring 16K, 18/20K, 22K, 40K replacing rubber.	0
Rear Axle & Equipment		
	Dual Dana Spicer D46-170HP rear axle rated at 46K. w/ 16mm housing and 2.06in. shaft diameter. Includes pump. Tandem rear axles.	582
	Rear Axle Ratio - 4.30.	0
	Dual Rear Brakes 16-1/2x7 in. to 46K; Bendix ES-extended service S-cam.	0
	Dual Rear Brake Drums: cast.	0
	Dual Rear Hubs: Aluminum hub pilot 46K 11-1/4 in. bolt circle.	0
	ConMet PreSet Plus Hub package; dual rear axle.	0
	Dual Rear axle automatic slack adjusters.	0
	Spring Brake: 3030 high output dual.	0
	Dustshields for drum brakes: all rear axles.	11
	Bendix 4S/4M anti-lock brake system w/ air traction control (ATC).	2
	Interaxle driveline 1 Dana SPL170XL	-4
	Wheel Differential Lock for Dana Spicer axles D40-170(P)/D46-170(H)(P)(WT) forward rear axle & rear rear axle.	112
	Separate flip valve for dual axles: differential lock or crosslock.	0
	Tandem Hendrickson HAULMAAX (HMX) 460 46K. 54 in. axle spacing. With shocks, track rods, rubber bolster bushings and 16.5 in. saddle height. Unladen Height: 10.6 in. Laden Height: 9.5 in.	61
	1 Steerable Pusher Watson-Chalin Tru Track 13.5K SL1190SSR Alumilite; includes axle.	1,271
	1 Steerable Pusher Brakes: Bendix Non-RSD 15x4 Use with 13.5Kaxle.	0
	1 Steerable Pusher brake drum 15x4 for use with 13.5K axle.	0

Unpublished options may require review/approval.
Dimensional and performance data for unpublished options may vary from that displayed in PROSPECTOR.

Printed:	11/10/2016 12:08:33 PM	*Complete*	Model Number:	T800 Series Conventional.
Effective Date:	Jul 1, 2016		Quote/DTPO/CO:	Q84325077
Prepared by:	SCOTT SAUER		Version Number:	38.21

	Description	Weight
	1 Steerable pusher hubs aluminum hub pilot for use with 13.5K axle.	0
	Steerable pusher: optional dustshields.	6
	Pusher or Tag: gauge/flip valve dash-mounted; gauge and pressure regulator mounted BOC(S) lower LH side.	0
	1st Pusher location: 64 in. from c/l forward tandem axle or single rear axle.	0
Tires & Wheels		
	Front tires: Michelin XZY3 425/65R22.5 20PR 44.7 in. diameter, all position. 20.6in. SLR.	190
	RR MICHELIN X WORKS Z 11R24.5 16PR	216
	1 steerable pusher:2 Michelin XZE 255/70R22.5 16PR. 36.7 in. diameter, all position. AKA PXZE. 17.2 in. SLR.	-40
	Rear Tire Quantity: 8	0
	Front wheel: Accuride 29807 22.5x12.25 steel white, Steel Armor[TM] powder coat, hub pilot mount. 11500lb. maximum rating. 5-hand holes.	102 — Alum
	Rear wheel: Accuride 50641 24.5X8.25 steel ACCU-LTE. Steel Armor[TM] powder coat, hub pilot mount. 7400lb. maximum rating. 5-hand hole.	64 — Alum
	1 steerable pusher wheel: 2 Accuride 50487 steel 22.5x8.25. Steel Armor[TM] powder coat, hub pilot mount. 7400lb. maximum rating. 5-hand holes.	0 — Alum
	Powder coat white steel wheel. Use in conjunction with front, dual front, rear, spare or lift axle wheel code(s). All wheels on chassis must have same finish color.	0
	Rear Wheel/Rim Quantity: 8	0
Frame & Equipment		
	Frame Rails: 10-3/4 x 3-1/2 x 3/8in. Steel 337in. to 416 in. Truck frame weight is 3.48 lb.-in. per pair of rails. Section modulus is 17.80, RBM is 2,132,000 in-lbs per rail. Frame rail availability may be restricted based upon application, axle/suspension capacity, fifth wheel setting, or component/dimensional specifications. The results of the engineering review may result in a change to the requested frame rail. If a change is required Kenworth Application Engineering will advise the dealer of the appropriate material specification for a substitute rail.	564
	Full Steel Insert: for 10-5/8 in. or 10-3/4 in. Steel 337 in. to 416 in. or 2nd insert for 11-5/8 in. steel frame. Adds 1,149,000 in-lb to main rail RBM. Truck insert weight is 2.05 lb.-in. per pair of rails. Full frame insert length is equal to wheelbase plus rear frame cutoff plus dimension forward of front axle by model: T660 and T800 = 21.26 in., C500B = bumper setting minus 0.79 in., W900B = 5.27 in., W900L = 1.50 in., W900S = 3.27 in., T440/T470 50 in. bumper setting = 21.26 in., T470 73 in. bumper setting = 72.3 in.	742
	Bumper: Tapered chrome steel channel. Requires a bumper setting code.	63
	48.5 in. Bumper setting. Requires a bumper code.	0

Unpublished options may require review/approval.
Dimensional and performance data for unpublished options may vary from that displayed in PROSPECTOR.

Printed:	11/10/2016 12:08:33 PM	*Complete*	Model Number:	T800 Series Conventional.
Effective Date:	Jul 1, 2016		Quote/DTPO/CO:	Q84325077
Prepared by:	SCOTT SAUER		Version Number:	38.21

	Description	Weight
	Front tow hook: Center mounted, cast. Requires iron front drive brackets.	28
	Front mudflaps.	0
	Custom Frame Layout: one chassis	0
	Battery box module: Short length aluminum parallel under cab, aluminum diamond plate cover w/ step. Up to 2 air tanks may mount to bottom of box. Batteries will be oriented perpendicular on rail.	0
	Battery box location: LH Side.	0
	T470,C5, T6, T8 non-polished DPF/SCR or CNG cover diamond plate w/ step. For use w/ 2010 or later exhaust systems. For T8, use extended length non-polished battery box on opposite rail to match the length of under cab components.	30
	C500,T800 twin steer, non-polished DPF/SCR cover. No cab access, no step.	0
	Heavy-duty BOC crossmember assembly.	23
	Rear mudflap arms: Betts B-25 standard-duty, straight. Includes B1732 mounting brackets as standard.	0
	Rear mudflap shields: White plastic antisail w/ Kenworth logo.	0
	Square end-of-frame w/ o crossmember;non-towing.	0
Fuel Tanks & Equip		
	Fuel Tank: 100 US gallon 24.5in. aluminum BOC replace. Class 8 fuel tanks w/ o locking caps include an anti-siphon device on the filler neck.	0
	Small round DEF tank. 11 gallons of useable volume. The DEF tank will be located on the side you specified. If you have specific configuration or body builder concerns, please utilize the Custom Frame Layout option. Standard capacity is calculated by fuel capacity of the vehicle and will accommodate two diesel fill-ups for every DEF fill-up. For 1:1 DEF fuel fill ratio, add 7889204.	0
	Standard DEF to fuel fill ratio: 2:1 or greater.	0
	Anti-siphon device swaged in place. For any number of fuel tanks.	0
	DEF tank location is on the LH.	0
	Location: 100 gal fuel tank RH behind cab	0
Cab & Equipment		

Unpublished options may require review/approval.
Dimensional and performance data for unpublished options may vary from that displayed in PROSPECTOR.

Printed:	11/10/2016 12:08:33 PM	*Complete*	Model Number:	T800 Series Conventional.
Effective Date:	Jul 1, 2016		Quote/DTPO/CO:	Q84325077
Prepared by:	SCOTT SAUER		Version Number:	38.21

Description	Weight
Cab: Curved Glass Conventional. Cab Includes aluminum & fiberglass fully hucked cab w/ all aluminum bulkhead doors & continuous stainless steel piano-style door hinges. Single electric horn standard. Incandescent exterior lights include diagnosable bulb detection and warning. Trailer cable on tractors includes integrity detection. Standard features include multiplex wiring for interior lights, automated pre-trip inspection, short and open check diagnostics. Warning alarm will sound when lights are left on.	0
Cab door bearing blocks, top & bottom.	0
Hood: Sloped Metton Hood W/ Grille & Shell Use For T800B 1-Piece Requires Engine Mounted Air Cleaner, 1440 Square In. Radiator & 2007+ Engines.	0
Cab heater: W/integral defrosters & A/C 45,000 btu cab heater. No sleeper heater/AC. Includes 5 mode rotary control. T660 include filter media.	0
Steering wheel: 18 in. 4-spoke.	0
Adjustable telescoping tilt steering column.	10
5 sets of keys. Replaces standard 2 sets of keys.	0
All chassis on this order keyed alike. Only includes ignition & doors.	0
Off-highway dash switch: For ABS system. Includes indicator light.	0
PTO Air Control: Floor Mounted LH of Driver seat for customer installed PTO. Park brake interlock to prevent PTO engagement unless brake is engaged. Available on T680 and T880.	2
Information for customer-installed PTO Chelsea 100/221/260/381/410/420/440 6-bolt.	0
Switch & Wiring for Customer-Installed PTO. Electric over hydraulic PTO. Includes switch guard. Wiring is routed to LH frame for connection to the customer installed PTO. No air controls are provided with this code.	0
Three spare switches: Wired to power.	0
Gauge: Engine Oil Temperature Gauge With Integral warning light. The NavPlus HD unit includes a virtual engine oil temperature gauge.	0
Gauge: Fuel filter restriction gauge.	0
Gauge: Manifold Pressure Gauge. The NavPlus HD unit includes a virtual manifold pressure gauge.	0
Gauge: Ammeter gauge in addition to voltmeter. W/integral warning light.	0
Gauge: Axle oil temperature, dual-drive axle. (2 gauges) w/integral warning light.	0
Gauge: Oil Temperature Gauge Transmission. The NavPlus HD unit includes a virtual transmission oil temperature gauge.	0

Unpublished options may require review/approval.
Dimensional and performance data for unpublished options may vary from that displayed in PROSPECTOR.

Printed:	11/10/2016 12:08:33 PM	*Complete*	Model Number:	T800 Series Conventional.
Effective Date:	Jul 1, 2016		Quote/DTPO/CO:	Q84325077
Prepared by:	SCOTT SAUER		Version Number:	38.21

Description	Weight
KW Driver Information Center: Includes fuel economy, RPM display, trip information, truck information, diagnostics, gear display, alarm clock.	0
Instrument package: Includes speedometer, tachometer, fuel gauge, engine coolant temperature gauge, engine oil pressure, voltmeter. Class 8 also includes primary & secondary air reservoir gauges & an air application gauge. DEF level gauge and warning lamp are included with 2010+ engines. Engine hour meter and outside air temperature readouts are standard. Primary read out will be MPH. Add 8240620 to switch primary scale to KPH in Canada.	0
Cab interior: Splendor. Includes smooth upholstered side & back panels w/stitched accent lines, upholstered door pads, full vinyl headliner, black dash panels & black rubber floormats.	0
Interior color: Slate Gray w/trim Dark Slate Gray	0
Driver seat: Kenworth Air cushion Plus HB Mordura Standard features includes 7 in. fore and aft slide adjustment w/isolator, 6-23 degree recline, air suspension with cover, dual armrests, and single chamber air lumbar support. Seat cushion is 20 inches wide w/ 2-position tilt and 2-position front cushion extension. Seat material has a horizontal stitch pattern and is 2-tone in color. Seat back is carpeted and includes a map pocket. Seat is manufactured by National. Includes inside visor and retractable 3-point matching seat belts. Grey seat belts.	0
Rider seat: Kenworth Toolbox Plus HB Mordura. Standard features include fixed base and backrest, tool box seat base w/ door, and dual armrests. Seat cushion is 19.5 inches. Seat material has a horizontal stitch pattern and is 2-tone in color. Seat back is carpeted. Seat is manufactured by National. Includes inside visor and retractable 3-point matching seat belts. Grey seat belts.	0
Seat color: All Jet Black.	0
Kenworth Radio with AM/FM/WB/USB and Bluetooth	4
CB Radio: Cobra 29. W/header mounted quick release. Includes transceiver & separate speaker remote-mounted in headliner & dual CB antennas. Includes sound tracker & illuminated panel.	11
Solid post antenna: Mounted on LH cowl. Replaces top-of-cab antenna. Recommended for dump trucks, loggers, & where overcab clearance is limited.	0
CB binding posts: Located above cupholder console. Includes one red power post & one black ground post. Wiring protected for 10 amps.	0
Additional accessory power supply wiring. In header.	0
Speakers: Four 4 in. x 6 in. high performance. Adds 2 speakers to the Panasonic standard 2. Located in cab header & rear cab corners.	0
Under dash center console: Includes one cupholder & two 12V outlets. For use w/Autoshift, Ultrashift, & Allison Gen IV only.	0

Unpublished options may require review/approval.
Dimensional and performance data for unpublished options may vary from that displayed in PROSPECTOR.

Printed:	11/10/2016 12:08:33 PM	*Complete*	Model Number:	T800 Series Conventional.
Effective Date:	Jul 1, 2016		Quote/DTPO/CO:	Q84325077
Prepared by:	SCOTT SAUER		Version Number:	38.21

Description	Weight
Non-self cancelling turn signal: W/column-mounted headlight dimmer switch & intermittent wiper control.	0
Electric LH & RH door locks.	0
Stainless steel permit panels on cab.	13
Kenworth TruckTech+ The Kenworth Remote Diagnostics system provides the Worlds Best reporting of engine and aftertreatment fault codes, as well as enhanced support for the truck owner through rapid communication of fault severity and recommended actions. This option is Standard on all Kenworths with an MX engine.	0
Long grabhandle RH side of cab.	0
Long grabhandle LH side of cab.	0
Grabhandle LH inside door frame above dash.	0
Grabhandle RH inside door frame above dash.	0
DAYLITE DOOR: LH/RH INCL RH PEEPER WINDOW	0
Single air horn under cab.	0
Look-Down, Pass. Door, Stainless 8.5x4.4	0
Dual convex heated mirror 8.5 inch w/ offset mounting below regular mirror.	11
Mirror: Dual Moto heated mirrors 7 in. x 16 in. LH & RH remote controlled. Switch located on door pad.	0
Mirror brackets 8-1/2 ft load width.	0
Rear Cab Stationary Window 17 in. x 36 in.	0
Electric-powered LH & RH door window lifts. Switch located on door.	0
Fresnel lens for peeper window, RH door 10-1/8 in. X 11-1/8 in. Replaces standard peeper window.	0
One-piece windshield, w/ curved glass.	0
Exterior stainless steel sunvisor.	11
2 in. rubber wheelwell fender extension.	8
Link Cabmate suspension.	22
Quiet Cab Package: For Non-VIT Interiors. Includes Firewall Insulation & Floor Covering w/ Sound Deadening Materials and Cowl Blanket	77

Lights & Instruments

Headlamps: Dual Rectangular, extended life halogen	0
Marker Lights: Five, rectangular, LED	0
Turn Signal Lights: Mounted on fender	0

Unpublished options may require review/approval.
Dimensional and performance data for unpublished options may vary from that displayed in PROSPECTOR.

Printed:	11/10/2016 12:08:33 PM	*Complete*	Model Number:	T800 Series Conventional.
Effective Date:	Jul 1, 2016		Quote/DTPO/CO:	Q84325077
Prepared by:	SCOTT SAUER		Version Number:	38.21

	Description	Weight
	LED Stop,Turn,Tail: With Two LED Backup Lights and With An LED License Plate.	0
	Turn Signal Lights: Rectangular mounted mirror bottom, in addition to standard.	2
	Fog Light: W/ Clear Lens . Does Not Include Rock Screens on T660.	4
	Customer-installed road/fog lights switch & wiring.	0
	Switch & Wiring for Customer-installed Floodlight w/o electrical pass-through - 1st set. Wire coiled BOC/BOS.	0
	Halogen Spotlight: LH & RH mounted. T680 and T880 models include dash switch for RH spot lamp as standard.	11
	Spotlight: RH wired to dash switch; LH standard wiring.	0
	Stainless Steel Brackets, Switch & Wiring: Customer-installed dual beacon lights mounted over door of cab with insulators.	4
	Daytime Running Lamps.	0
	Marker Lights: Interrupter Switch. Included in Turn Signal For All Models Except T3. The T3 Switch Is In The Dash.	0
	LH & RH Courtesy Lamps: On upper skirt to light up steps.	0
	Reflectors: Two Midframe	0
	Electric Backup Alarm: Meets SAE J994 & OSHA requirements.	4
	Circuit Breakers: Replacing fuses. Does not apply to any 5-amp fuse box position. Breakers include stop/brake/turn, tail lamp, high & low beams, marker/clearance lamps, horn, fuel heat, gauges, air dryer, HVAC controls, panel lamps. Some circuits will remain fuses.	0
Air Equipment		
	Air Dryer: Bendix AD-IS Extended Purge heated. with PuraGuard	4
	Moisture ejection valve w/ pull cable drain.	0
	Full truck kit: Gladhands mounted at end-of- frame.Seven-way female receptacle mounted at end-of-frame in taillamp bracket. Kit includes dash mounted trailer air supply valve, trailer hand control valve, and hoses/fittings for the valves. Dash mounted parking brake valve, tractor protection valve, and spring brake inversion/relay valves are standard.	15
	Nylon air tubing in frame & cab, excluding hoses subject to excessive heat or flexing.	0

Unpublished options may require review/approval.
Dimensional and performance data for unpublished options may vary from that displayed in PROSPECTOR.

Printed:	11/10/2016 12:08:33 PM	*Complete*	Model Number:	T800 Series Conventional.
Effective Date:	Jul 1, 2016		Quote/DTPO/CO:	Q84325077
Prepared by:	SCOTT SAUER		Version Number:	38.21

	Description	Weight
	Trailer ABS electric supply through SAE J560 7-pin connector per TMC RP137).	0
Extended Warranty		
	Standard Warranty.	0
Miscellaneous		
	GHG Secondary Manufacturer: Does Not Apply	0
	Zinc Phosphate frame rail paint processing. Requires frame rail code. Code is for 1 pair of rails.	0
Paint		
	Paint color number. N97020 A - L0006 WHITE N97200 FRAME N0001 BLACK	0
	Bumper Unpainted	0
	Day Cab Standard Paint	0
	1 - Color Paint - Day Cab Color will be White if no other color is specified.	0
	Base coat/clear coat. The Kenworth Color Selector contains additional instructions, as well as information on Kenworth paint guidelines and surface finish applications. Kenworth is standard with Dupont Imron Elite paint.	0
Total Weight		20390 lb

Prices and Specifications Subject to Change Without Notice.

Unpublished options may require review/approval.
Dimensional and performance data for unpublished options may vary from that displayed in PROSPECTOR.

Printed:	11/10/2016 12:08:33 PM	*Complete*	Model Number:	T800 Series Conventional.
Effective Date:	Jul 1, 2016		Quote/DTPO/CO:	Q84325077
Prepared by:	SCOTT SAUER		Version Number:	38.21

Board of Commissioners
Clatsop County

AGENDA ITEM SUMMARY

December 14, 2016

Issue/Agenda Title: Contract Amendment

Category: Consent Calendar

Prepared By: Greg Engebretson

Presented By: Greg Engebretson

Issue before the Commission: Amendment No. 2 to the contract with Cowlitz County, Washington for juvenile detention services, establishing a new bed cost rate and extending the end date of the contract to December 31, 2018.

Informational Summary: The County has been utilizing Cowlitz County, Washington for juvenile detention services since January 2014 and the contract will expire at the end of December, 2016. The bed cost rate has remained the same for three years. The current amendment would increase the daily rate from $130.00 to $137.00 per bed day for the 2017 calendar year and $144.00 for the 2018 calendar year. The contract would continue to be for an average of two beds per day, or 730 bed days during each annual term of the contract. The contract allows for the purchase of additional beds in excess of the 730 annual bed days at the same daily rate.

Fiscal Impact: The current 2016/2017 budget includes an appropriation of $183,000 for contracted detention services. Contracting for two beds, or 730 bed days, at Cowlitz County would cost $100,008 in 2017 and $105,120 in 2018.

Options to Consider:

1. Approve and sign the amendment extending the contract for an additional two years at the new rate.
2. Request that other options be explored regarding the County's need for juvenile detention services.

Staff Recommendation: Option #1

Recommended Motion: *"I move to approve the contract amendment regarding the new rate and extending the end date of the contract until December 31, 2016."*

Attachment List:

A. Contract Amendment No. 2

B. Contract Amendment No. 1
C. Original Contract

AMENDMENT NO. 2 to
Cowlitz County Juvenile Services Agreement
with CLATSOP COUNTY

1. This Amendment No. 2 to Agreement is between Cowlitz County, Washington, ("COWLITZ"), and Clatsop County, Oregon, ("CLATSOP") shall take effect and be in force on the below stated date of authorization as agreed to by COWLTIZ and CLATSOP.

2. COWLTIZ AND CLATSOP have entered into an Agreement for juvenile services, to wit: AGREEMENT FOR DETENTION OF CLATSOP COUNTY JUVENILES IN THE COWLITZ COUNTY JUVENILE DETENTION FACILITY, approved and executed by the Cowlitz Board of County Commissioners on December 10, 2013, which agreement will expire on December 31, 2016.

3. CLATSOP is now in need of continuing or modifying the Agreement with COWLTIZ under the original AGREEMENT FOR DETENTION OF CLATSOP COUNTY JUVENILES IN THE COWLITZ COUNTY JUVENILE DETENTION FACILITY, as set forth below in section 4, and COWLITZ is amendable to this amendment in providing services to CLATSOP, under the same terms and conditions of the original Agreement.

4. Both COWLTIZ and CLATSOP agree to modify the original Agreement as in the parties' best interests and in furtherance of the purposes and intent of said Amendment, as below:

   a. Extending the term of the Agreement under section B.1.b of the original Agreement through **December 31, 2018.**

   b. Section H1 of the original agreement shall be modified to read as follows:

      From January 1, 2017 through December 31, 2017, CLATSOP COUNTY will pay $137.00 per bed day for an average of 2.0 beds per day and for a total of (730) bed day during an annual term of this Agreement, equaling a monthly amount of $8,334.00, during the period of January 1, 2017 through December 31, 2017.

      From January 1, 2018 through December 31, 2018, CLATSOP COUNTY will pay $144.00 per bed day for an average of 2.0 beds per day and for a total of (730) bed days during an annual term of this Agreement, equaling a monthly amount of $8,760.00, during the period of January 1, 2018 through December 31, 2018.

   c. Section H2 of the original agreement shall be modified to read as follows:

      From January 1, 2017 through December 31, 2017, any bed days incurred by CLATSOP COUNTY in excess of (730) bed days during any annual term will be paid at the rate of $137.00 per each additional bed day.

      From January 1, 2018 through December 31, 2018, any bed days incurred by CLATSOP COUNTY in excess of (730) bed days during an annual term will be paid at the rate of $144.00 per each additional bed day.

   d. Section I of the original agreement shall be modified to read as follows:

      During the period from January 1, 2017 through December 31, 2017, COWLITZ COUNTY agrees to bill CLATSOP COUNTY every month by the 15th of the month following the billed period for all services pursuant to this agreement at the

rate of $8,334.00, plus any costs as set forth herein. All shall be paid within thirty (30) days of billing.

During the period from January 1, 2018 through December 31, 2018, COWLITZ COUNTY agrees to bill CLATSOP COUNTY every month by the 15th of each month following the billed period for all services pursuant to this agreement at the rate of $8,760.00, plus any costs as set forth herein. All shall be paid within thirty (30) days of billing.

5. Except as provided above in this Amendment No. 2, all terms, conditions, duties, obligations and provisions of the original Agreement and any prior Amendment(s) shall remain in full force and effect.

The parties hereto have executed this agreement on this day of , 2016, and each signatory to this Amendment No. 2 warrants that he/she is duly authorized and executes this Amendment for and on behalf of the below-inscribed parties hereto.

CLATSOP COUNTY, OREGON:

By:_____
Scott Lee, Chair
(authorized by law to sign for CLATSOP COUNTY)

ATTEST:

_____
T. Ostreim, Cowlitz Clerk of Board

BOARD OF COUNTY COMMISSIONERS
OF COWLITZ COUNTY, WASHINGTON

_____
Michael A. Karnofski, Chairman

_____
Dennis P. Weber, Commissioner

_____
Joe Gardner, Commissioner

CLATSOP COUNTY COUNSEL
APPROVED AS TO FORM:

BY:_____

CONTRACT AMENDMENT FORM HAS BEEN
APPROVED BY COWLITZ PROSECUTING ATTYS
OFFICE – CIVIL SECTION

RECORDED

JAN 14 2015

Doc# 2015010010

C5402

AMENDMENT NO. 1 to
Cowlitz County Juvenile Services Agreement
with CLATSOP COUNTY

1. This Amendment No. 1 to Agreement is between Cowlitz County, Washington, ("COWLITZ"), and Clatsop County, Oregon, ("CLATSOP") shall take effect and be in force on the below stated date of authorization as agreed to by COWLTIZ and CLATSOP.

2. COWLTIZ AND CLATSOP have entered into an Agreement for juvenile services, to wit: AGREEMENT FOR DETENTION OF CLATSOP COUNTY JUVENILES IN THE COWLITZ COUNTY JUVENILE DETENTION FACILITY, approved and executed by the Cowlitz Board of County Commissioners on December 10, 2013 , which agreement will expire on December 31, 2014.

3. CLATSOP is now in need of continuing or modifying the Agreement with COWLTIZ under the original AGREEMENT FOR DETENTION OF CLATSOP COUNTY JUVENILES IN THE COWLITZ COUNTY JUVENILE DETENTION FACILITY, as set forth below in section 4, and COWLITZ is amendable to this amendment in providing services to CLATSOP, under the same terms and conditions of the original Agreement.

4. Both COWLTIZ and CLATSOP agree to modify the original Agreement as in the parties' best interests and in furtherance of the purposes and intent of said Amendment, as below:

   a. Extending the term of the Agreement under section B.1.b of the original Agreement through **December 31, 2016.**

5. Except as provided above in this Amendment No. 1, all terms, conditions, duties, obligations and provisions of the original Agreement and any prior Amendment(s) shall remain in full force and effect.

The parties hereto have executed this agreement on this day of , 2014, and each signatory to this Amendment No. 1 warrants that he/she is duly authorized and executes this Amendment for and on behalf of the below-inscribed parties hereto.

CLATSOP COUNTY, OREGON:

By: _____

Scott Lee, Chair

Title (authorized by law to sign for CLATSOP)

BOARD OF COUNTY COMMISSIONERS
OF COWLITZ COUNTY, WASHINGTON

Michael A. Karnofski, Chairman

absent-excused
James R. Misner, Commissioner

Dennis P. Weber, Commissioner

ATTEST:

T. Ostreim, Cowlitz Clerk of Board

BOARD OF COUNTY COMMISSIONERS COWLITZ COUNTY WASHINGTON

CLATSOP COUNTY COUNSEL
APPROVED AS TO FORM:

BY: _____

CONTRACT AMENDMENT FORM HAS BEEN
APPROVED BY COWLITZ PROSECUTING ATTYS
OFFICE – CIVIL SECTION

RECORDED

JAN 14 2014

Doc# 201401000 8

C5402

AGREEMENT FOR DETENTION OF
CLATSOP COUNTY JUVENILES
IN THE COWLITZ COUNTY JUVENILE DETENTION FACILITY

THIS AGREEMENT, made and entered into this 10th day of December, 2013, is between CLATSOP COUNTY, a political subdivision of the state of Oregon, and COWLITZ COUNTY, political subdivision of the State of Washington, by and through their respective Board of Commissioners, and is authorized under RCW 39.34, RCW 13.40 and RCW 13.16, and under ORS 190.410 to 190.440, and under RCW 13.24.060 and ORS 417.080.

A. PURPOSE:

The purpose of this agreement is to permit juveniles under the jurisdiction of CLATSOP COUNTY Juvenile Department ("Juvenile Division") to be housed at the COWLITZ COUNTY Juvenile Detention Facility, located at 1725 1st Avenue, Longview, Washington.

B. TERMS AND CONDITIONS:

1. General Terms.
   a. The effective date of this agreement shall be upon the execution of this agreement by both parties, hereto, and upon recording or posting of the Agreement by COWLITZ COUNTY in accordance with RCW 39.34.040.
   b. The term of this agreement shall be the period from January 1, 2014, through December 31, 2014_.
   c. If either party is in breach of this Agreement, the other party may terminate this Agreement immediately by providing written notice to the offending party. The parties accept the risk that termination of this agreement may result in the turning away of potential detainees who would otherwise be accepted at Juvenile Detention.
   d. This Agreement shall be administered for COWLITZ COUNTY by Chadwick M. Connors and for CLATSOP COUNTY by Janet Evans.

2. Specific Terms and Conditions.
   a. For the purpose of this agreement, "Juvenile" shall mean a youth, age twelve (12) through age seventeen (17).
   b. COWLITZ COUNTY in accordance with the rules, policies and procedures governing the detention of juveniles in accordance with laws of State of Washington—unless otherwise expressly directed by CLATSOP COUNTY and agreed to by COWLITZ COUNTY—will provide secure custody/detention for CLATSOP COUNTY juveniles detained in accordance with laws of State of Oregon.
   c. No waiver of any right under this Agreement shall be effective unless made in writing by an authorized representative of the party to be bound thereby. Failure to require full performance on any occasion shall not constitute consent to or waiver of any continuation of nonperformance or any later nonperformance; nor does payment of a billing or continued performance after notice of a deficiency in performance constitute acquiescence thereto.

3. Admission.
   a. CLATSOP COUNTY shall contact the COWLITZ COUNTY Juvenile Detention Facility by telephone prior to bringing any juvenile to be detained pursuant to this agreement and provide faxed information the next working day on a "Detention Authorization" form; and
   b. Any juvenile detained pursuant to this agreement must be accompanied by an arrest report/probable cause detention information sheet filled out by the law enforcement officer that placed the youth in custody, a telephonic confirmation of detention from a CLATSOP COUNTY juvenile probation officer, or a signed order to detain by the CLATSOP COUNTY juvenile court. As soon as reasonably practicable, CLATSOP COUNTY shall present any other applicable and relevant court orders on the juvenile detainee, including but not limited to actual warrants of arrest and bench warrants, and/or judgment and sentence and order of commitment. COWLITZ COUNTY shall bear no responsibility to screen juvenile detainees from CLATSOP COUNTY against the detention criteria and legal standards of either State.
   c. A juvenile detainee who is unconscious or not lucid, under the influence of alcohol and/or drugs, gravely disabled or requiring care per medical necessity as defined in RCW 71.34.020, or in need of necessary treatment of medical and dental conditions requiring prompt attention may not be accepted into detention.
   d. A juvenile detainee with medical injuries, or who reports that he or she is currently experiencing significant medical issues may be accepted in detention only when determined fit for detention by a medical doctor or emergency room medical staff.
   e. Should a juvenile detainee be discovered to by subject to section 3, c or d, above, during the intake process which would prevent COWLITZ COUNTY from taking custody of the detainee, CLATSOP COUNTY shall arrange pick up of the detainee within a reasonable amount of time and take such actions regarding the detainee as it deems necessary.
   f. CLATSOP COUNTY shall, to the fullest extent practicable, provide all information available to CLATSOP regarding its detainee(s) as is routinely required of such juvenile detention facilities. Such information shall include any know medical or accommodation requirements for detainees, including but not limited to the Americans with Disabilities Act.

C. SPACE AVAILABLE BASIS:

1. COWLITZ COUNTY agrees during any annual term of this agreement to make available to CLATSOP COUNTY, as set forth hereunder, during an annual term of this Agreement at the Cowlitz County Juvenile Detention Facility located at 1725 1st Avenue, Longview, WA for the placement of juveniles under the jurisdiction of the Juvenile Division

2. COWLITZ COUNTY agrees to permit juveniles under the jurisdiction of the Juvenile Division to be housed at the COWLITZ COUNTY Juvenile Detention Facility, located at 1725 1st Avenue, Longview, Washington, on a space available basis.

3. COWLITZ COUNTY reserves the right to refuse to accept any CLATSOP

COUNTY juveniles if in the opinion of the COWLITZ COUNTY Juvenile Administrator or his/her designee, it would not be in the best interest of COWLITZ COUNTY due to overcrowding, anticipated overcrowding or other negative population impact on the COWLITZ COUNTY Juvenile Detention Facility.

4. If the population of the detention facility is such that it necessitates reduction, CLATSOP COUNTY shall remove all juveniles detained on a space available basis as requested within twenty-four (24) hours after notice by telephone that such a reduction is necessary.

D. DOCUMENTATION/REQUIREMENTS FOR DETENTION:

1. CLATSOP COUNTY shall contact the COWLITZ COUNTY Juvenile Detention Facility by telephone prior to bringing any juvenile to be detained pursuant to this agreement and provide faxed information the next working day on a "Detention Authorization" form; and

2. Any juvenile detained pursuant to this agreement must be accompanied by an arrest report/probable cause detention information sheet filled out by the law enforcement officer that placed the youth in custody, a telephonic confirmation of detention from a CLATSOP COUNTY juvenile PO, or a signed order to detain by the CLATSOP COUNTY Juvenile Court.

3. CLATSOP COUNTY shall provide to COWLITZ COUNTY any medical information it has describing a juvenile's known or existing medical condition at the juvenile was taken into custody. CLATSOP COUNTY shall also provide any on-going prescription medication needed to control the condition.

4. CLATSOP COUNTY and COWLITZ COUNTY agree to comply with the requirements of the Health Insurance Portability and Accountability Act (HIPAA), and administrative rules adopted to implement the Act, with regard to all health information transferred pursuant to this agreement.

E. TRANSPORTATION:

1. CLATSOP COUNTY shall provide all transportation requirements and assume all financial responsibility for costs of any juvenile detainee being transported to and from COWLITZ COUNTY pursuant to this agreement and shall hold and save COWLITZ COUNTY harmless from any and all liability resulting from such transfer, in accordance with paragraph K. HOLD HARMLESS, set forth below.

2. Occasional local transportation arrangements, such as transporting a juvenile to a local commercial transportation facility, may be provided by COWLITZ COUNTY by prior arrangement. Costs for transportation and stand-by-time of staff of COWLITZ COUNTY shall be assessed to CLATSOP COUNTY and shall be the Internal Revenue Service mileage rate in effect at the time of service, and the current employee cost per hour of a juvenile detention officer (salary and benefits).

3. COWLITZ COUNTY may provide transportation to and from local health providers for medical treatment. COWLITZ COUNTY shall have the right to arrange for emergency medical care notwithstanding a request from CLATSOP COUNTY to retake custody of the juvenile detainee. COWLITZ COUNTY will make reasonable efforts to notify CLATSOP COUNTY before securing emergency medical evaluation or treatment of the detainee. Costs for transportation and stand-by-time of staff of COWLITZ COUNTY assessed to CLATSOP COUNTY shall be as set forth above.

F. COMMUNICATIONS:

1. The CLATSOP COUNTY shall maintain routine contact with the COWLITZ COUNTY regarding any and all juveniles detained in COWLITZ COUNTY pursuant to this agreement. CLATSOP COUNTY shall provide 24 hour contact information to COWLITZ COUNTY Juvenile Detention Staff.

2. In addition to notifications addressed above, COWLITZ COUNTY shall contact the CLATSOP COUNTY in the event of any unusual problems or issues regarding a juvenile being detained pursuant to this agreement.

G. DETENTION STANDARDS:

1. COWLITZ COUNTY shall provide CLATSOP COUNTY with a copy of its Detention Intake Standards.

2. Any juvenile accepted by COWLITZ COUNTY shall be placed in a standard detention program unless the court order specifies otherwise.

H. COSTS PER BED:

1. CLATSOP COUNTY will pay $130.00 per bed day for an average of 2.0 beds per day and for a total of (730) bed days during an annual term of this Agreement, equaling a monthly amount of $7,908.00, throughout the term of this Agreement.

2. Any bed days incurred by CLATSOP County in excess of (730) bed days during any annual term will be paid at the rate of $130.00 per each additional bed day.

I. REIMBURSEMENT OF COSTS:

COWLITZ COUNTY agrees to bill CLATSOP COUNTY every month by the 15th of the month following the billed period for all services pursuant to this agreement at the rate of $7,908.00, plus any costs as set forth herein. All shall be paid within thirty (30) days of billing.

J. MEDICAL COSTS:

1. COWLITZ COUNTY shall provide routine medical services or sick call medical attention as is provided to other juvenile detainees for which the health care provider does not render a separate billing for providing care to a specific individual. In addition to the per bed rate, CLATSOP COUNTY shall be responsible for any other medical costs incurred by COWLITZ COUNTY for the care of juveniles held under this agreement, including, but not limited to, any third-party transportation which may in the judgment of COWLITZ COUNTY be reasonably necessary to transport a juvenile to a health center or hospital for treatment, any non-cosmetic dental services, any prescription drugs, and any medical services.

2. If reasonably possible, COWLITZ COUNTY shall notify the CLATSOP COUNTY juvenile department in advance of incurring these extraordinary medical costs. Nothing contained herein shall be construed to waive the rights of either party to seek reimbursement for costs from their respective state social and health services departments, or from the detainee, his or her parents/guardian or any other responsible party.

K. HOLD HARMLESS:

CLATSOP COUNTY agrees to indemnify and hold COWLITZ COUNTY harmless, and its elective and appointed officers, employees and agents free and harmless from and against all claims, demands and causes of action of any kind or character, including the cost of defense thereof, arising prior to the effective transfer of a CLATSOP COUNTY juvenile detainee to and acceptance of that juvenile by COWLITZ COUNTY pursuant to sections A through D of this Agreement, or during any time CLATSOP COUNTY juvenile detainees are in the direct custody or control of employees or agents of CLATSOP COUNTY.

COWLITZ COUNTY agrees to indemnify and hold CLATSOP COUNTY harmless, and its elective and appointed officers, employees and agents free and harmless from and against all claims, demands and causes of action of any kind or character, including the cost of defense thereof, arising after CLATSOP COUNTY juvenile detainees are transferred to and accepted by COWLITZ COUNTY as provided in sections A through D of this Agreement, or during the time CLATSOP COUNTY juveniles are in the direct custody of employees or agents of COWLITZ COUNTY, excepting only any claims alleging negligent or wrongful acts or omissions on the part of employees or agents of CLATSOP COUNTY and/or its juvenile court.

L. CHANGES OR ADDITIONS:

No change or addition to this agreement shall be valid or binding upon either party unless such change or addition is in writing and executed by both parties.

M. TERMINATION, MODIFICATION AND RENEWAL:

It shall automatically renew from year to year thereafter unless otherwise modified or terminated. Except as otherwise provided herein, this Agreement may be terminated by either party, effective no less than sixty (60) days after receipt or written notice given by the party seeking to terminate. This Agreement may be modified only after written notice of intention to modify and by mutual agreement of the parties.

N. CONSTITUTIONAL AND STATUTORY PROVISIONS:

1. This agreement is subject to the debt limitation provisions of Article VIII, Section 6 of the Washington Constitution, and Article XI, Section 10 of the Oregon Constitution, and the provisions of the Washington Tort Claims Act, Revised Code of Washington (RCW), Chapter 4.96, and the Oregon Tort Claims Act, Oregon Revised Statutes (ORS) ORS 30.260 to 30.300.

2. Nothing in this Agreement shall be construed as a waiver of the State of Washington or its political subdivisions to be subject to suit only in the State of Washington. Further, COWLITZ COUNTY, and its officers, employees, agents and assigns shall be subject to no liability or obligation arising out of this Agreement that would not be recognized and enforced against them by the courts of the State of Washington.

3.

BOARD OF COUNTY COMMISSIONERS:
OF CLATSOP COUNTY, OREGON:

Peter Huhtala , Chair

BOARD OF COUNTY COMMISSIONERS
OF COWLITZ COUNTY, WASHINGTON

Michael Karnofski, Chairman

James Misner, Commissioner

Dennis Weber, Commissioner

Approved as to Form:

By:_____
Office of County Counsel

Attest:

Tiffany Ostrein, Clerk of the Board
12-10-13

Approved as to Form:

Approved via Agenda Quick
Douglas Jensen, Chf. Civil Dep. Prosecutor
12-2-13

Agenda Item 7-a

Board of Commissioners
Clatsop County

AGENDA ITEM SUMMARY

December 2, 2016

Issue/Agenda Title: Appointments to the Fair Board

Category: Business Agenda

Prepared By: Kathi Mattinen, Fair Manager

Presented By: Kathi Mattinen,Fair Manager

Issue before the Commission: Three full-term appointments and two confirmations to the Clatsop County Fair Board

Informational Summary: The Clatsop County Fair Board consists of five members of the public that are appointed by the Clatsop County Board of Commissioners, in accordance with ORS 565.210. Each member is appointed for three-year terms.

Due to one board member resignation before their term ended, and the expiration of two board seats as of December 31, 2016, three vacancies will occur and board members need to be appointed to fill those positions. Current board member Jack Ficken is interested and has requested that he be reappointed. Applications were received from Kallie Linder; Janae Jasper; Paul Mitchell; Jennifer Bunch and John (Jack) Ficken. The Fair Board recommends that Kallie Linder and Paul Mitchell be newly appointed and John (Jack) Ficken be reappointed.

The formal reappointment of two current members, Mike Autio and Jack Edwards, did not occur when their terms expired on December 31, 2014 and it is requested that their positions be confirmed and their terms set to expire on December 31, 2017.

Fiscal Impact: No fiscal impact expected

Options to Consider:

1. Appoint as recommended
2. Solicit for more applicants
3. Table the decision

Staff Recommendation: The Clatsop County Fair & Expo Manager and Board recommend that Mike Autio and Jack Edwards positions be confirmed with their terms set to expire on December 31, 2017. It is also recommended that the Board of Commissioners reappoint current member John (Jack) Ficken, and appoint interested applicants Kallie Linder and Paul Mitchell with terms ending December 31, 2019.

"Motion to appoint John (Jack) Ficken, Kallie Linder and Paul Mitchell to the **FAIR BOARD** *for full terms ending December 31, 2019 and confirm Mike Autio and Jack Edwards to complete their current terms ending on December 31, 2017.*

Attachment List:

A. Current Roster
B. Copy of Applications received

Fair Board

Michael A. Autio
mike@autioco.com
93750 Autio Loop
Astoria, OR 97103

Position: Status: member
Phone: (H) 503 458-6191; (W) 503 325-9155
Term:
Term Exp. Date: 12/31/2017

Remarks: Current Board member

Jack L. Edwards
Email: jackedwards@charter.net
91707 Youngs River Road
Astoria, OR 97103

Position: Status: member
Phone: (H) 503 325-0805; (M) 503-338-9555
Term:
Term Exp. Date: 12/31/2017

Remarks: Current Board member

John (Jack) Ficken
jtficken@q.com
91382 Lewis and Clark Road
Astoria, OR 97103

Position: Status: member
Phone: (W) 503 298-2330; (M) 503 449-0560
Term:
Term Exp. Date: 12/31/2016

Remarks: interested in reappointment

Tom Iverson
34837 Highway 101 Business
Astoria, OR 97103

Position: Status: resigned
Phone: (H) 503 325-8743: (W) 503 338-9308
Term:
Term Exp. Date: 12/31/2016

Remarks: resigned effective August 9, 2016

Neil (Andy) Mendenhall
Mendenhall2025@gmail.com
89778 Highway 101
Warrenton, OR 97146

Position: Status: member
Phone: (W) 503 738-6363 (MO 503 440-3011
Term:
Term Exp. Date: 12/31/2016

Remarks: did not request reappointment

COMMITTEE, BOARD OR COMMISSION APPLICATION
CLATSOP COUNTY

Date: 9/30/16

Vallie Linder
Name

90862 Youngs River Rd
Mailing Address

Astoria
City

RECEIVED
OCT 17 2016
By

Street Address: Same as above Email: mrsjlinder@gmail.com

Home Telephone: ~~503-338-3864~~ 503-741-0233 Other Telephone: 503-338-3864
(☒ work ☐ cell phone)

Current Occupation: Salon owner - Hairdresser

Years Resident of County: 40

Do you live within the city limits: ☐ Yes ☒ No

In which Commission District do you reside: ☐ 1 ☐ 2 ☐ 3 ☐ 4 ☐ 5

Committee, Board of Commission Applied for:

1. fair board
2.
3.

Background (Relevant education, training, experience, etc.):

Astoria Parents Club board
- Astor
- Lewis + Clark
- Umbrella board.

Business Owner 12 years.

Please complete other side →

Describe your interest in serving on this Board, Committee or Commission:

I am interesting in serving on the board because I would like to be some fresh perspective. As a mom of two kids involved in 4h I am passionate about the fair program and what it offers. As a business owner that utilizes social marketing immensely I feel like I can be an asset in that area also.

Signature

Return Form To: ***County Manager's Office***
800 Exchange St., Ste. 410
Astoria, OR 97103
Fax: 325-8325
email: commissioners@co.clatsop.or.us

COMMITTEE, BOARD OR COMMISSION APPLICATION
CLATSOP COUNTY

Date: 9-23-16

Janae Jasper
Name

35482 Tucker Creek Ln
Mailing Address

Astoria, OR 97103
City

RECEIVED
SEP 27 2016
By

Street Address: 35482 Tucker Creek Ln Email: jjasper1089@gmail.com

Home Telephone: 503-741-5298 Other Telephone: 503-298-0176
☐ work ☑ cell phone)

Current Occupation: Eligibility and Benefits Coordinator

Years Resident of County: 27

Do you live within the city limits: ☐ Yes ☑ No

In which Commission District do you reside: ☐ 1 ☐ 2 ☑ 3 ☐ 4 ☐ 5

Committee, Board of Commission Applied for:

1. Fair Board

2.

3.

Background (Relevant education, training, experience, etc.):

I have lived in Clatsop County all my life. I have worked at my current job at the only Community Health Center in our county, which provides affordable health care to all regardless of their ability to pay, for over 7 years. I participated in 4-h projects for 9 years, showing all large animal projects at the Clatsop County Fair. When I graduated high school I became the assistant leader of Melville Livestock with my mother in law Gina Jasper.

Please complete other side →

Describe your interest in serving on this Board, Committee or Commission:

I am interested in serving on the Fair Board because I am rooted in this community and want to see the 4-h program grow and flourish. I believe that I bring enthusiasm and passion to help keep this opportunity open to Clatsop County. I will also bring a fresh approach to making decisions regarding the Clatsop County Fair and how to make it more successful and attractive to the public.

Janae Jasper

Signature

Return Form To: ***County Manager's Office***
800 Exchange St., Ste. 410
Astoria, OR 97103
Fax: 325-8325
email: commissioners@co.clatsop.or.us

COMMITTEE, BOARD OR COMMISSION APPLICATION
CLATSOP COUNTY

Date: 10/3/16

Paul Mitchell
Name

955 Sw Cedar Dr.
Mailing Address

Warrenton Or. 97146
City

RECEIVED
OCT - 3 2016
By

Street Address: same as a bove

Email: pmitchell32@aol.com

Home Telephone: 503-861-0707

Other Telephone: 503-791-1675
☐ work ☑ cell phone)

Current Occupation: Marketing Manager Columbia Memorial Hospital

Years Resident of County: 13

Do you live within the city limits: ☑ Yes ☐ No

In which Commission District do you reside: ☑ 1 ☐ 2 ☐ 3 ☐ 4 ☐ 5

Committee, Board of Commission Applied for:

1. Fair Board

2.

3.

Background (Relevant education, training, experience, etc.):

Strong understanding of working on a board. I am a past Vice Chair of the Clarsop County Fair Board 2003-2006.

I am a former President of the Astoria/rWarrenton Chamber of Commerce. I curerently sit on the board of the Warrenton, Planning Comission, Warrenton Business Association, Warrenton Budget Commitee and I am the immediate Past President of the Clatsop County Historical Society.

Please complete other side →

Describe your interest in serving on this Board, Committee or Commission:

I believe the fairgrounds are more then a place for a yearly week long event. I believe it is a hub for all of the county.

I would like to serve to see tthat the great work being done today is contiued and expanded.

Paul Mitchell

Signature

Return Form To: ***County Manager's Office***
800 Exchange St., Ste. 410
Astoria, OR 97103
Fax: 325-8325
email: commissioners@co.clatsop.or.us

RECEIVED
OCT 14 2016
By

COMMITTEE, BOARD OR COMMISSION APPLICATION
CLATSOP COUNTY

Date: October 13, 2016

Jennifer Bunch
Name

92167 KC Creek Rd
Mailing Address

Astoria, OR 97103
City

Street Address: 92167 KC Creek Rd, Astoria, 97103 Email: jenn.bunch2@gmail.com

Home Telephone: _____ Other Telephone: 503-298-8698
☐ work ☑ cell phone)

Current Occupation: Owner - Wickiup Consulting LLC

Years Resident of County: 27

Do you live within the city limits: ☐ Yes ☑ No

In which Commission District do you reside: ☐ 1 ☐ 2 ☐ 3 ☑ 4 ☐ 5

Committee, Board of Commission Applied for:

1. Fair Board
2. _____
3. _____

Background (Relevant education, training, experience, etc.):

I have over 12 years experience working directly with Boards, Commissions, and Committees. I have an understanding of the County budget process and general policies and procedures. I have been active in the local equestrian community and in Oregon Equestrian Trails - North Coast Chapter for over 10 years, For the last two I have served as Chapter Co-Chair. This group is active in Clatsop County and has held several events at the fairgrounds.

I hold an Associates Degree from Clatsop Community College, a Bachelors Degree from Portland State and have completed Graduate Coursework from NW Missouri State University. Earlier this year I became a land use consultant after working for 12 years with Clatsop County.

Please complete other side →

Describe your interest in serving on this Board, Committee or Commission:

The Clatsop County Fairgrounds should serve as a gathering place for family friendly and community events as well as attracting concerts, conferences, and other events from outside our area which will in turn have a positive economic impact for our county. It's time to think outside the box and recognize the potential to attract visitors from all over the northwest.

However, at the same time, we must not lose sight on the original purpose of the county fairgrounds, to promote agriculture and community. We've experienced an unfortunate downturn in participation in FFA and 4-H programs, as have other communities nationwide. These programs are so very important in helping our children become responsible and contributing adults. We need to do what we can to promote these programs and ensure their continued existence.

I would be honored to be selected as a Clatsop County Fair Board and have the opportunity to help shape the future of the fair and this important facility.

Jennifer Bunch

Signature

Return Form To: ***County Manager's Office***
800 Exchange St., Ste. 410
Astoria, OR 97103
Fax: 325-8325
email: commissioners@co.clatsop.or.us

COMMITTEE, BOARD OR COMMISSION APPLICATION
CLATSOP COUNTY

Date: 12-21-10

John N. Ficken (Jack)
Name

91382 Lewis + Clark Rd.
Mailing Address

Astoria, OR 97103

Street Address: _____ Email: Jtficken@q.com

Home Telephone: 503-440-0560 Other Telephone: 503-440-0560
(☐ work ☒ cell phone)

Current Occupation: Sales - Versa Corp. / Wallusk. Western Ltd.

Years Resident of County: 46

Do you live within the city limits: ☐ Yes ☒ No

In which Commission District do you reside: ☐ 1 ☐ 2 ☐ 3 ☐ 4 ☐ 5

Prior Criminal Convictions (omit minor traffic violations): ☐ Yes ☒ No

If Yes, Explain: _____
(Attach additional pages if needed)

Committee, Board of Commission Applied for:

1. Clatsop Co. Fair Board
2. _____
3. _____

Background (Relevant education, training, experience, etc.):

OSU - Ag- Economics Bach. Degree
4-H member + Leader
FFA
Work in Ag. Sales field.

Describe your interest in serving on this Board, Committee or Commission:

I have 2 children that are coming into 4-H / FFA. Need to make sure fairgrounds is a viable entity for years to come. Like to involve community in using the fairgrounds for events. I work well with the leaders of county.

Signature

Return Form To: ***County Manager's Office***
Attn: Valerie Crafard
800 Exchange, Ste 410
Astoria, OR 97103
Fax: 325-8325

Board of Commissioners
Clatsop County

AGENDA ITEM SUMMARY

December 14, 2016

Issue/Agenda Title: Appointment to the Arts Council of Clatsop County

Category: Business Agenda

Prepared By: Theresa Dursse, Executive Assistant - Clerk of the Board

Presented By: Don Frank, Board Chair, Arts Council of Clatsop County

---

Issue before the Commission: Appointment to the Arts Council of Clatsop County

Informational Summary: The Arts Council of Clatsop County was formed in January of 2014. According to the Arts Council by-laws the Council shall consist of not fewer than seven and no more than nine members who are appointed and serve at the pleasure of the Clatsop County Board of Commissioners. Each member shall serve for a term of three years.

With the resignation of Denise Reed the Council advertised for the vacant seat. This resulted in three applications from members of the community interested in appointment: Rick Crawford, David Martin and Gail Henrikson. Gail Henrikson withdrew her application. Rick Crawford had previously applied for a vacant seat and was not chosen. The Council would like to recommend Rick Crawford be appointed to the Arts Council of Clatsop County.

Fiscal Impact: No fiscal impact anticipated.

Options to Consider:
1. Appoint Rick Crawford to the Council.
2. Solicit additional applications.
3. Take no action.

Staff Recommendation: Option #1

Recommended Motion: *"I move to appoint Rick Crawford to the Arts Council of Clatsop County."*

Attachment List:
A. Applications

COMMITTEE, BOARD OR COMMISSION APPLICATION
CLATSOP COUNTY

Date: 09/24/2016

RECEIVED
SEP 26 2016
By

RICK CRAWFORD
Name

673 ALAMEDA AVE
Mailing Address

ASTORIA, OR 97103
City

Street Address: SAME

Email: RICKCRAWFORDSTUDIOS@GMAIL.C

Home Telephone: 386-871-6786

Other Telephone: SAME
☐ work ☑ cell phone)

Current Occupation: SCULPTOR + JEWELER

Years Resident of County: 1

Do you live within the city limits: ☑ Yes ☐ No

In which Commission District do you reside: ☑ 1 ☐ 2 ☐ 3 ☐ 4 ☐ 5

Committee, Board of Commission Applied for:

1. ARTS COUNCIL
2.
3.

Background (Relevant education, training, experience, etc.):

FULL TIME SCULPTOR + JEWELER SINCE 2007.
FORMER VICE-CHAIRMAN, CITY OF ASHEVILLE, NC, TREE AND GREENWAY COMMISSION.
MEMBER IN GOOD STANDING OF THREE INTERNATIONAL ARTS ORGANIZATIONS.

Please complete other side →

Describe your interest in serving on this Board, Committee or Commission:

I AM A STRONG ADVOCATE FOR THE ARTS, AND AS SUCH, I FEEL THAT IT IS VERY IMPORTANT FOR ME TO PROMOTE THE ARTS IN ANY WAY POSSIBLE. I BRING TO THE TABLE A WEALTH OF ARTS RELATED EXPERIENCES GAINED OVER MY LIFETIME, FROM NOT ONLY WITHIN THE U.S, BUT ALSO IN OTHER COUNTRIES, SUCH AS: FRANCE, ENGLAND, BELGIUM, AND NEW ZEALAND. I AM CURRENTLY IN THE DISCUSSION PHASE WITH THE MARITIME MUSEUM TO DEVELOP A WOODTURNING PROGRAM IN THEIR WOODSHOP, AND THE ESTABLISHMENT OF A LOCAL CHAPTER OF THE AMERICAN ASSOCIATION OF WOODTURNERS, OF WHICH I AM A MEMBER.

Rick Crawford

Signature

Return Form To: ***County Manager's Office***
800 Exchange St., Ste. 410
Astoria, OR 97103
Fax: 325-8325
email: commissioners@co.clatsop.or.us

COMMITTEE, BOARD OR COMMISSION APPLICATION
CLATSOP COUNTY

Date: _____

RECEIVED
SEP 29 2016
By _____

David F. Martin
Name

1400 West Marine Dr. Apt #24
Mailing Address

Astoria, Oregon, 97103
City

Street Address: 1400 W. Marine Dr. #24 Email: dm.quackerbacker@gmail.com

Home Telephone: 574 386-2189 Other Telephone: 503 861-6620
☒ work ☐ cell phone)

Current Occupation: Ohana Media Group - on air talent

Years Resident of County: 2+

Do you live within the city limits: ☒ Yes ☐ No

In which Commission District do you reside: ☐ 1 ☐ 2 ☒ 3 ☐ 4 ☐ 5

Committee, Board of Commission Applied for:

1. Arts

2. _____

3. _____

Background (Relevant education, training, experience, etc.):

AAS - Public Relations / Radio Broadcasting
Author, Singer, Songwriter, Poet
former → News Anchor - KXL Portland / DJ, KGON Portland
→ Ops Mgr. - AGPAL Broadcasting Newport

Please complete other side →

Describe your interest in serving on this Board, Committee or Commission:

I believe the imagination is "the most powerful nation in the world."

the arts stimulate, expand and develop the imagination.

To begin to understand the universe that exists in just one drop of water, is to step over the threshold from bland to beauty, from simple to sensational, from asleep to awake!

I wish to be a part in helping opportunities for this to bloom locally.

Signature

Return Form To: ***County Manager's Office***
800 Exchange St., Ste. 410
Astoria, OR 97103
Fax: 325-8325
email: commissioners@co.clatsop.or.us

Board of Commissioners
Clatsop County

AGENDA ITEM SUMMARY

December 14, 2016

Issue/Agenda Title: Addition of GIS Fee to county-wide fee schedule

Category: Business Agenda

Prepared By: Monica Steele, Budget & Finance Director

Presented By: Monica Steele, Budget & Finance Director

Issue before the Commission: Hold an opportunity for public comment pursuant to ORS 294.160 and following any public comment adopt the proposed request to add a Geographical Information Systems (GIS) Fee to the county-wide fee schedule effective Feb. 1, 2017.

Informational Summary: In an effort to make sure that the county is recouping actual costs for services provided staff regularly evaluate the fees charged. In recent discussion between IT and the various departments that rely on Geographical Information Systems (GIS) data and services it has been identified that the Geographical Information prepared by county staff is not being charged appropriately for the data created and work performed. As a result staff has identified those fees throughout the county-wide schedule where GIS services are utilized and can be recouped by increasing the amount collected from customers utilizing those services.

Pursuant to ORS 294.160 it is necessary that the Board allow for public comment to consider testimony from any and all persons who may wish to comment on the proposed fee increase for Clatsop County.

Following any public comment and after consideration of testimony county staff requests that the Board adopt the proposed fee increase with an implementation date of February 1, 2017.

Fiscal Impact: The estimated revenue generated from this GIS fee will be approximately $75,000, and will be received in the General Fund.

Options to Consider:

1. Take public comment and adopt the proposed fee increase as presented to the Board.
2. Take public comment and adopt the proposed fee schedule with Board revisions.
3. Take public comment and maintain the existing fee schedule as it currently is.

Staff Recommendation: Option #1

Recommended Motion: *"I move that the Board allow for an opportunity for public comment and after considering all testimony adopt the proposed GIS fee as submitted to the Board"*

Attachment List:

A. Proposed 2016-17 GIS Fees

BEFORE THE BOARD OF COUNTY COMMISSIONERS FOR CLATSOP COUNTY, OREGON

IN THE MATTER OF AMENDING AND) ESTABLISHING FEES FOR CLATSOP) COUNTY.)	RESOLUTION AND ORDER

WHEREAS, certain fees and charges for services are required by law to be established by the governing body, and;

WHEREAS, the need to amend fees throughout County Departments has been established;

WHEREAS, the change in fees and charges was presented for public comment at the Board of Commissioner's meeting on December 14, 2016;

NOW, THEREFORE, IT IS HEREBY RESOLVED AND ORDERED that the attached schedule of fees and charges for Clatsop County be adopted to become effective February 1, 2017.

Adopted this 14th Day of December 2016.

BOARD OF COUNTY COMMISSIONERS
FOR CLATSOP COUNTY, OREGON

_____

Scott Lee, Chair

G. COUNTY CLERK & ELECTIONS

Liquor License ..... Set by Statute
Liquor License Renewal ..... Set by Statute
OLCC New Application ..... Set by Statute
Precinct Maps $7
Marriage License/Domestic Partnerships $50
Marriage Ceremony [ORS 205.320(6)] ..... Set by Statute
Marriage 3-Day Waiver $15
Certification of Copies ..... Set by Statute
Certification of Marriage License ..... Set by Statute
Add'l copies ..... Set by Statute
Certification of Voter Registration ..... Set by Statute
Election Report/Lists ..... See OAR 165-002-0020
Passport Processing ..... Set by Statute
Passport Photo $15
Registering each additional page of a document ..... Set by Statute
Registering each additional transaction of a document ..... Set by Statute
Appointment of Trustee ..... Set by Statute
Add'l GIS fee $9
Death Certificate for Title Change ..... Set by Statute
Add'l GIS fee $9
Deed ..... Set by Statute
Add'l GIS fee $9
Easement ..... Set by Statute
Add'l GIS fee $9
Judgement ..... Set by Statute
Lien/Lien Satisfaction ..... Set by Statute
Lien/Lien Satisfaction w/o HAT ..... Set by Statute
IRS Lien ..... Set by Statute
Mortgage/Deed of Trust/Line of Credit ..... Set by Statute
Add'l GIS fee $9
Mortgage Satisfaction ..... Set by Statute
Add'l GIS fee $9
Non-Standard Form Fee, Per Document ..... Set by Statute
Military Discharge DD-214 ..... No Charge
Partial Reconveyance ..... Set by Statute
Add'l GIS fee $9
Partition Plat Map ..... Set by Statute
Add'l GIS fee $9
Power of Attorney ..... Set by Statute
Add'l GIS fee $9
Reconveyance ..... Set by Statute
Add'l GIS fee $9

Satisfaction of Judgement ..... Set by Statute
Substitution of Trustee ..... Set by Statute
Add'l GIS fee $9
Town Plat Map ..... Set by Statute
Add'l GIS fee $9
UCC Filing on OR 1A Form ..... Set by Statute
Add'l GIS fee $9
Research Fee Per Document ..... Set by Statute
Research Fee Per Quarter Hour $15
Photocopy Fee Per Page $0.25
Mailing Fee $4
Express Mail Fee $25
Fax Charges $3
Candidate Voters Pamphlet Statement ..... Per Statute
Annexation Appl – Expansion of District (for one parcel $100
Annexation Appl – New District Formed or W/drawal of area from Dist. $500
Annexation Appl – Urban Renewal $2,500

H. DISTRICT ATTORNEY

Photocopy Charges:
Misdemeanor ..... $10 per case up to 30 pages/25 cents per page in excess of 30 pages Felony ..... $15 per case up to 30 pages/25 cents per page in excess of 30 pages
Media ..... $15 per tape Color copies – excess 30 pages ..... $1.25 per page

I. GIS FEES

PAPER MAPS:

STANDARD MAP PRODUCTS

A/B size (8 ½ x 11 – 13 x19") $5
Add $3 for color, orthophotos, saturated shading

C/D size (24" sheet roll) Standard map products .... $25 per sheet
Add $10 for color, orthophotos, saturated shading

Discounted price for government, nonprofit organizations, bulk rate:...$20 per /sheet
Add $10 for color, orthophotos, saturated shading

E Size (36" sheet roll) Standard map products..... $35 per sheet
Add $15 for color, orthophotos, saturated shading

Discounted price for government, nonprofit organizations, bulk rate....$30 per sheet
Add $3 for color, orthophotos, saturated shading

ONSITE WASTEWATER MANAGEMENT

RESIDENTIAL FEES	County	DEQ	Total Fee
New Site Evaluations			
Single Family Dwelling – First lot	~~$680~~ 689	$100	~~$780~~ 789
- Each additional lot evaluated during initial visit	~~$680~~ 689	$100	~~$780~~ 789
Construction Installation Permits			
New Construction-Standard seepage trench, redundant, absorption in Saprolite, steep slope, aerobic	~~$1008~~ 1017	$100	~~$1100~~ 1109
New Construction-Alternative Treatment Tech (ATT), capping fill, pressurized, tile dewatering	~~$1235~~ 1244	$100	~~$1335~~ 1344
New Construction-Sand filter bottomless, recirculating gravel	~~$1520~~ 1529	$100	~~$1620~~ 1629
New Construction-Install holding tank	~~$864~~ 873	$100	~~$964~~ 973
New gray water disposal sump	~~$448~~ 457	$100	~~$548~~ 557
Pump or siphon system needed-in addition to permit fee	~~$64~~ 73		~~$64~~ 73
Repair Residential-Minor (tank to distribution box)	~~$256~~ 265	$100	~~$356~~ 365
Repair Residential-Major (drain field)	~~$535~~ 544	$100	~~$635~~ 644
Alterations-Minor (tank to distribution box)	~~$264~~ 273	$100	~~$364~~ 373
Alterations-Major (drain field)	~~$552~~ 561	$100	~~$652~~ 661
Reinstatement, Transfer, Renewals (original permit within 1 yr of expiration)-No visit	~~$152~~ 161	$100	~~$252~~ 261
Reinstatement, Transfer, Renewals-Visit	~~$520~~ 529	$100	~~$620~~ 629
Other Onsite Activities			
Authorization Notice-no visit	$164	$100	$264
Authorization Notice-Visit (required on systems greater than 10 years old)	$624	$100	$724
Existing System Evaluation-Visit (includes time of sale inspection, planning review, other system evaluations)	$192	$100	$292
Mobile Hardship Renewal Authorization, field visit required No field visit required	$330 $160		$330 $160
Miscellaneous			
Research fee per quarter hour	~~$15~~ 17.25		~~$15~~ 17.25
Ordinance 901 Septic System Review	$100		$100
Records request fee, **plus .25 cents a copy**	$3.75		$3.75
EH field time (re-inspections, compliance) hourly, prorated at 15 minute increments	$286		$286

COMMERCIAL FEES	County Fees Based on Gallons Per Day (gpd)				DEQ
New Site Evaluations	First 1,000	1,001-1,500	1,501-2,000	2,001-2,500	
Commercial Facility System-First 1,000 gallons projected flow	~~$680~~ 689	~~$856~~ 865	~~$1,032~~ 1041	~~$1,208~~ 1217	$100
Construction Installation Permits	First 1,000	1,001-1,500	1,501-2,000	2,001-2,500	
New Construction-Standard seepage trench, redundant, absorption in saprolite, steep slope, aerobic	~~$1,008~~ 1017	~~$1,104~~ 1113	~~$1,200~~ 1209	~~$1,296~~ 1305	$100
New Construction-Alternative Treatment Tech (ATT), capping fill, pressurized, tile dewatering	~~$1235~~ 1244	~~$1,313~~ 1322	~~$1,391~~ 1400	~~$1,469~~ 1478	$100
New Construction-Sand filter bottomless, recirculating gravel	~~$1520~~ 1529	~~$1,660~~ 1669	~~$1,712~~ 1721	~~$1,808~~ 1817	$100
New Construction-Install holding tank	~~$864~~ 873	~~$960~~ 969	~~$1,056~~ 1065	~~$1,152~~ 1161	$100
New gray water disposal sump	~~$448~~ 457	~~$544~~ 553	~~$640~~ 649	~~$736~~ 745	$100
Minor Repair Permit (tank to distribution box)	~~$464~~ 473				$100
Major Repair Permit (drain field)	~~$1,008~~ 1017				$100
Reinstatement, Transfer, Renewals (original permit within 1 yr of expiration)- No Field visit	$152				$100
Reinstatement, Transfer, Renewals- Field Visit	$520				$100
Other Onsite Activities					
Authorization Notice-no visit	$164				$100
Authorization Notice-Visit (required on systems greater than 10 years old)	$624				$100
Existing System Evaluation-Visit (includes time of sale inspection, planning review, other system evaluations)	$192				$100
Miscellaneous					
Research fee per quarter hour	~~$15~~ 17.25				
Records request fee, plus .25 cents a copy	$3.75				
EH field time (re-inspections, compliance) hourly, prorated at 15 minute increments	$286				

Board of Commissioners
Clatsop County

AGENDA ITEM SUMMARY

December 14, 2016

Issue/Agenda Title: Purchase of Property adjoining Columbia River Valley Substation (Svensen Shop)

Category: Business Agenda

Prepared By: Ted McLean, Assistant Public Works Director

Presented By: Michael Summers, Public Works Director

Issue before the Commission: Consider the purchase of Property from Western Resources Investment Company, Inc.

Informational Summary: Clatsop County Public Works recommends the purchase of 1.5 acres of property adjoining east of the Columbia River Valley Substation, (that certain tract of land described in Book 66, page 361, Clatsop County Records, excepting therefrom the West 398 feet thereof; together with a parcel of land described as the South 25 feet of the West 398 feet of the tract of land described in Book 66, page 361, Clatsop County Records, situated in the County of Clatsop, State of Oregon. Tax Map Lot 080822D000501, ID 20530). See Attached Exhibit Map.

The purpose of the property purchase:

#1- Enlarging the Public Works stockpile area which will allow for increased versatility and room.

#2- Controlling storm water runoff which is required.

#3- Providing a buffer area (Noise and Light Barrier) from residential development.

The Public Works Department has need for additional space to stockpile materials used for road maintenance and construction. There is also an intermittent stream that runs through the property north and south that collects our storm water runoff. This stream is in the 1.5 acre parcel that we would like to purchase. If the current adjoining easterly property was sold for residential use our storm water would greatly impact this property, possibly requiring us to manage in a different manner that would lessen the current space that we have available to store materials.

Western Resources Investment Company, Inc. is in the process of developing this 7 acre parcel and subdividing for residential use. The Public Works Dept. had contacted them out of concern for the above 3 reasons.

Fiscal Impact: The public Works department has budgeted $60,000.00 for the purchase of this property

Options to Consider:

1. Approve the purchase of the property
2. Do not approve and direct staff to renegotiate the agreement terms
3. Do not purchase the property

Staff Recommendation: Option #1

Recommended Motion: *"I move to approve the purchase of this property and authorize the County Manager to sign the Purchase and Sale Agreement, Deed and all escrow forms required by Ticor Title Company for closing.*

Attachment List:

A. Property Line Adjustment Exhibit Map
B. Purchase and Sale Agreement

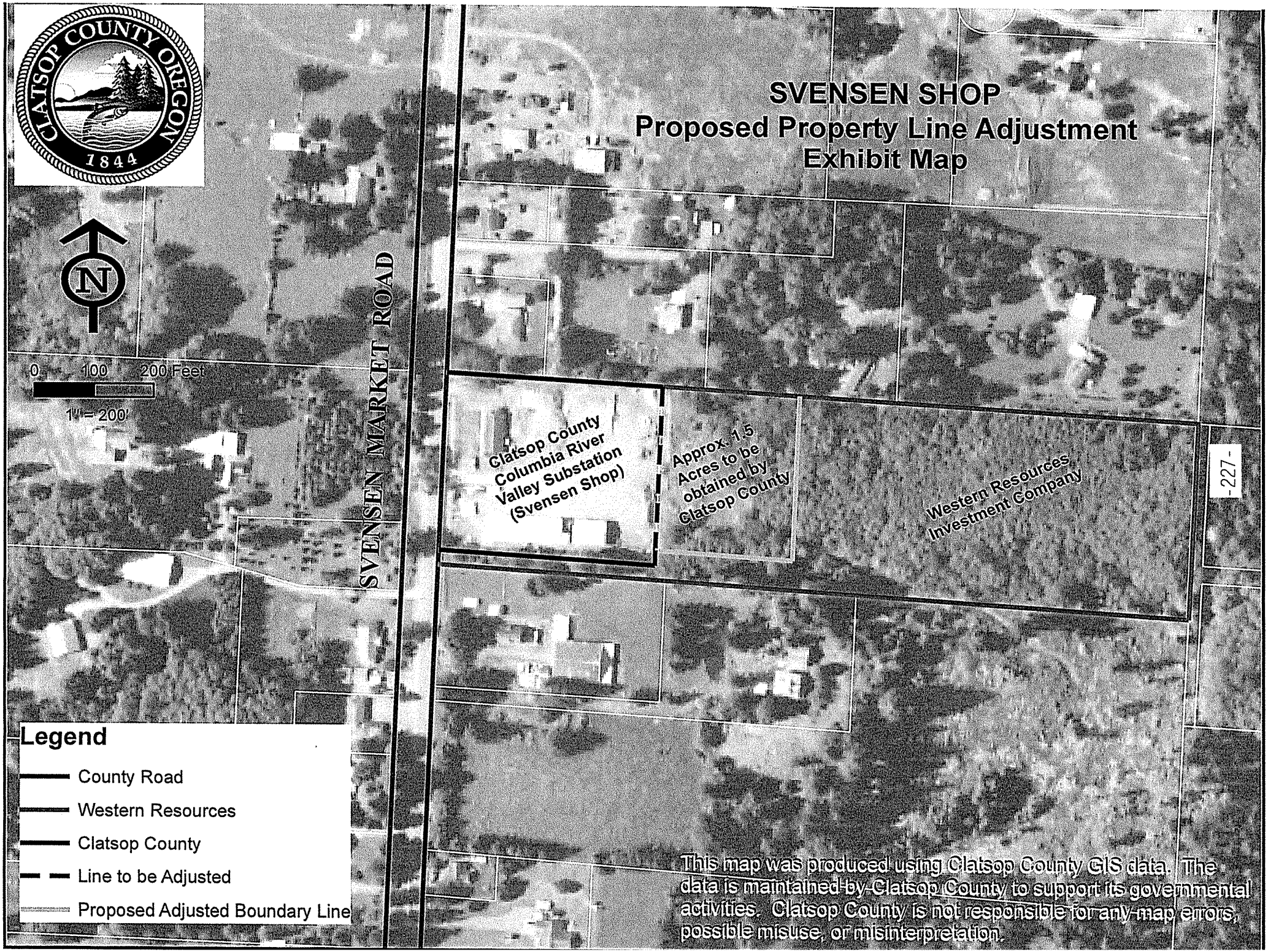
SVENSEN SHOP
Proposed Property Line Adjustment
Exhibit Map
CLATSOP COUNTY OREGON
1844
N
0 100 200 Feet
1" = 200'
SVENSEN MARKET ROAD
Clatsop County
Columbia River
Valley Substation
(Svensen Shop)
Approx. 1.5
Acres to be
obtained by
Clatsop County
Western Resources
Investment Company
Legend
County Road
Western Resources
Clatsop County
Line to be Adjusted
Proposed Adjusted Boundary Line
This map was produced using Clatsop County GIS data. The
data is maintained by Clatsop County to support its governmental
activities. Clatsop County is not responsible for any map errors,
possible misuse, or misinterpretation.

PURCHASE AND SALE AGREEMENT

DATE: November __, 2016

SELLER: Western Resources and Investment Company, Inc
92658 Simonsen Road
Astoria, Oregon, 97103

BUYER: Clatsop County Road District 1
1100 Olney St.
Astoria, Oregon, 97103

Recital

Seller desires to sell to Buyer and Buyer desires to purchase from Seller a portion approximately 234 x 282 feet of certain vacant land Clatsop County, Oregon described as:

> That certain tract of land described in Book 66, page 361, Clatsop County Records, excepting therefrom the West 398 feet thereof; together with a parcel of land described as the South 25 feet of the West 398 feet of the tract of land described in Book 66, page 361, Clatsop County Records, situated in the County of Clatsop, State of Oregon.
> Tax Account 080822D-00501, ID 20530

The parcel will be sold to Buyer as a lot line adjustment, as the parcel adjoins Buyer's property which is Tax Account 080822D-00500, ID 20529. The parcel will be legally described by a survey that Buyer will complete prior to Closing (the "Property").

Agreement

Now, therefore, for valuable consideration, the parties agree as follows:

1. Sale and Purchase. Buyer agrees to purchase the Property from Seller and Seller agrees to sell the Property to Buyer for the sum of $60,000 (the "Purchase Price").

2. Earnest Money Seller hereby acknowledges receipt of the sum of $1,000, evidenced by Buyer's promissory note payable on the Closing Date, as that term is defined below.

3. Payment of Purchase Price. The Purchase Price shall be paid as follows:

3.1 At closing, earnest money paid shall be credited to the Purchase Price.

3.2 At closing, Buyer shall pay the balance of the purchase price in cash.

4. Closing. Closing shall take place on or before December 15, 2016 (the "Closing Date"), at the offices of Ticor Title Insurance Company, 630 Bond Street, Astoria, Oregon 97103. Each party shall pay one-half of the escrow fee.

5. Preliminary Title Report. The parties have preliminary title report #360416022506. Any encumbrance on title from Steve and/or Denise Allen shall be removed by Seller prior to Closing.

6. Conditions

6.1 Buyer's obligation to purchase the Property is contingent on satisfaction of each of the following conditions:

6.1.1 Buyer's approval of its physical inspection of the Property.

6.1.2 Seller's removal of the encumbrances referenced in Section 5. above.

6.1.3 Seller's approval, in its sole discretion, of the survey and legal description to be prepared by Buyer for the Property.

6.1.4 The approval of the Board of Commissioners of Clatsop County

6.1.5 The approval of the proposed lot line adjustment by the Clatsop County Planning Department. Seller agrees to cooperate in executing any documentation required by that department.

6.2 If any contingency is not met, either party may, by written notice, elect to not proceed with this transaction, and the earnest money, if any will be returned to Buyer.

7. Deed. On the Closing Date, Seller shall execute and deliver to Buyer a statutory warranty deed, conveying the Property to Buyer, free and clear of all liens and encumbrances except the Permitted Exceptions.

8. Title Insurance. Within 15 days after closing, Seller shall furnish Buyer with an ALTA owner's policy of title insurance in the amount of the purchase price, standard form, insuring Buyer as the owner of the Property subject only to the usual printed exceptions and the Permitted Exceptions.

9. Taxes; Prorates. Real property taxes for the current tax year, insurance premiums (if Buyer assumes the existing policy) and other usual items shall be prorated as of the Closing Date. Buyer will pay Seller for heating fuel, if any, on the Property as of the Closing Date. The title report also discloses the property is taxed as Forest Land. Any taxes and penalties for disqualification of this property from Forest Land categorization are the responsibility of Seller.

10. Possession. Buyer shall be entitled to possession immediately upon closing.

11. Seller's Representations regarding Hazardous Waste. Seller represents and warrants to Buyer that the Property has never been used for the storage or disposal of any hazardous material or waste. There are no environmentally hazardous materials or wastes contained on or under the Property and the Property has not been identified by any governmental agency as a site upon which environmentally hazardous materials or wastes have been or may have been located or deposited. This representation and warranty will survive closing and the conveyance of the Property to Buyer.

12. Binding Effect/Assignment Restricted. This Agreement is binding on and will inure to the benefit of Seller, Buyer, and their respective heirs, legal representatives, successors, and assigns. Nevertheless, Buyer will not assign their rights under this Agreement without Seller's prior written consent [which consent shall not be unreasonably withheld].

13. Remedies. TIME IS OF THE ESSENCE REGARDING THIS AGREEMENT. If the conditions described in Section 6 above are satisfied or waived by the Buyer, and this sale does not thereafter close, through no fault of Seller, before the close of business on the Closing Date, Buyer shall pay the earnest money deposit to Seller as liquidated damages. If the conditions described in Section 6 above are satisfied or waived by the Seller, or Seller fails to deliver the deed described in Section 7 above on the Closing Date or otherwise fails to consummate this transaction, the earnest money shall be refunded to Buyer.

14. Attorney Fees. In the event action is instituted to enforce any term of this Agreement, the prevailing party shall recover from the losing party reasonable attorney fees incurred in such action as set by the trial court and, in the event of appeal, as set by the appellate courts.

15. Notices. All notices and communications in connection with this Agreement shall be given in writing and shall be transmitted by certified or registered mail, return receipt requested, to the

appropriate party at the address first set forth above. Any notice so transmitted shall be deemed effective on the date it is placed in the United States mail, postage prepaid. Either party may, by written notice, designate a different address for purposes of this Agreement.

16. Entire Agreement. This Agreement sets forth the entire understanding of the parties with respect to the purchase and sale of the Property. This Agreement supersedes any and all prior negotiations, discussions, agreements, and understandings between the parties. This Agreement may not be modified or amended except by a written agreement executed by both parties.

17. Applicable Law. This Agreement shall be construed, applied, and enforced in accordance with the laws of the State of Oregon.

"THE PROPERTY DESCRIBED IN THIS INSTRUMENT MAY NOT BE WITHIN A FIRE PROTECTION DISTRICT PROTECTING STRUCTURES. THE PROPERTY IS SUBJECT TO LAND USE LAWS AND REGULATIONS THAT, IN FARM OR FOREST ZONES, MAY NOT AUTHORIZE CONSTRUCTION OR SITING OF A RESIDENCE AND THAT LIMIT LAWSUITS AGAINST FARMING OR FOREST PRACTICES, AS DEFINED IN ORS 30.930, IN ALL ZONES. BEFORE SIGNING OR ACCEPTING THIS INSTRUMENT, THE PERSON TRANSFERRING FEE TITLE SHOULD INQUIRE ABOUT THE PERSON'S RIGHTS, IF ANY, UNDER ORS 195.300, 195.301 AND 195.305 TO 195.336 AND SECTIONS 5 TO 11, CHAPTER 424, OREGON LAWS 2007, AND SECTIONS 2 TO 9 AND 17, CHAPTER 855, OREGON LAWS 2009, AND SECTIONS 2 TO 7, CHAPTER 8, OREGON LAWS 2010. BEFORE SIGNING OR ACCEPTING THIS INSTRUMENT, THE PERSON ACQUIRING FEE TITLE TO THE PROPERTY SHOULD CHECK WITH THE APPROPRIATE CITY OR COUNTY PLANNING DEPARTMENT TO VERIFY THAT THE UNIT OF LAND BEING TRANSFERRED IS A LAWFULLY ESTABLISHED LOT OR PARCEL, AS DEFINED IN ORS 92.010 OR 215.010, TO VERIFY THE APPROVED USES OF THE LOT OR PARCEL, TO VERIFY THE EXISTENCE OF FIRE PROTECTION FOR STRUCTURES AND TO INQUIRE ABOUT THE RIGHTS OF NEIGHBORING PROPERTY OWNERS, IF ANY, UNDER ORS 195.300, 195.301 AND 195.305 TO 195.336 AND SECTIONS 5 TO 11, CHAPTER 424, OREGON LAWS 2007, SECTIONS 2 TO 9 AND 17, CHAPTER 855, OREGON LAWS 2009, AND SECTION 2 TO 7, CHAPTER 8, OREGON LAWS 2010."

SELLER:

Western Resources Investment Co
by _____, pres.

BUYER:

_____

Board of Commissioners
Clatsop County

AGENDA ITEM SUMMARY

December 14, 2016

Issue/Agenda Title: Linn County State Forest Lawsuit – Public Input

Category: Business Agenda

Prepared By: Cameron Moore, County Manager

Presented By: Heather Reynolds, County Counsel & Cameron Moore, County Manager

---

Issue before the Commission: Linn County Class Action Litigation against Oregon Department of Forestry.

Informational Summary: In March 2016 the Board of Commissioners of Linn County filed suit in Linn County Circuit Court against the Oregon Department of Forestry, alleging breach of contract by the state in the management of over 650,000 acres of state forest lands. These state forest lands were transferred to the state by 15 counties in the 1930's and 40's under an agreement that the state will manage these lands to achieve the greatest permanent value for the counties.

The lawsuit pertains to a contract entered into between the State and 15 Forest Trust Land Counties in 1941, and whether that contract has been amended by the parties or breached by the State. The Linn County Circuit Court has previously ruled for Linn County in this case to permit a ***class action***, permit the claim for breach of contract to be pursued and limit the scope of the lawsuit to that contractual issue. The questions to be answered at trial will be what the terms of the 1941 contract were, whether it was amended or breached, and if breached, whether there was any damage to the taxing districts.

The "class" that has been certified by the Court includes all taxing districts – schools, fire protection, ports, health districts, etc. - in the 15 counties whose jurisdictions includes areas within the state forest. As a result of the court action certifying the class all taxing districts in the 15 State Forest Counties are considered to be a part of the class. Taxing districts that do not wish to continue as part of the class must opt-out in writing no later than January 25, 2017.

This agenda item is purely for the purpose of accepting public testimony on this issue – no action on the Board's part is anticipated at this meeting. Written public comments will be accepted through Jan. 6.

Fiscal Impact: Unknown

Options to Consider:

1. Remain a part of the class.
2. Opt-out of the class

Staff Recommendation: Consider public input regarding staying in or opting out of the Linn County Lawsuit

Recommended Motion: *None*

Attachment List: